FUNAI

SERVICE MANUAL

15" COLOR LCD TELEVISION

LCD-A1506/LCD-B1506/ LCD-C1506/LCD-D1506

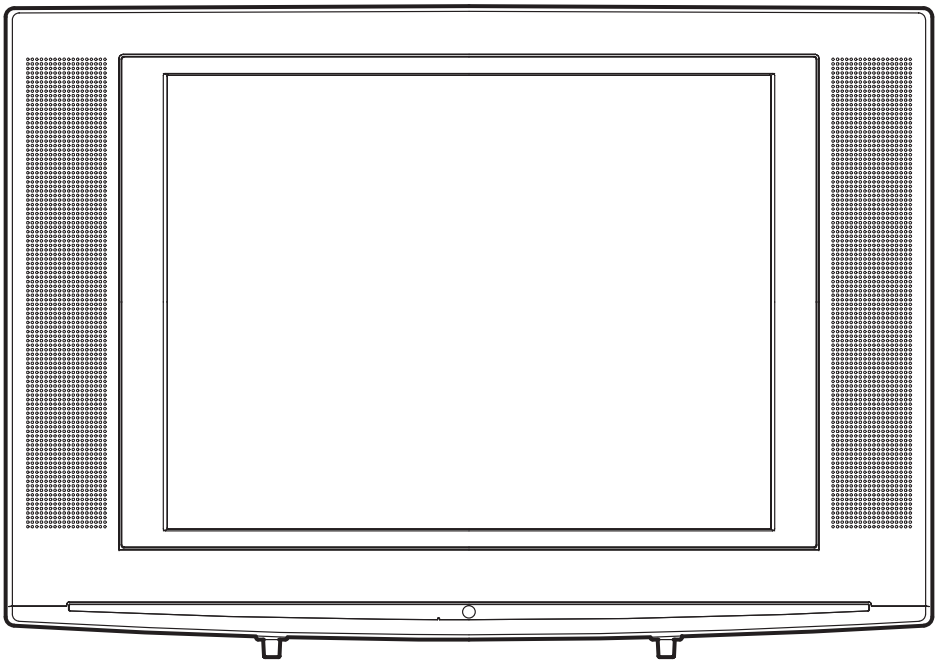

15″ COLOR LCD TELEVISION

LCD-A1506/LCD-B1506/ LCD-C1506/LCD-D1506

TABLE OF CONTENTS

The LCD panel is manufactured to provide many years of useful life. Occasionally a few non active pixels may appear as a tiny spec of color. This is not to be considered a defect in the LCD screen.

SPECIFICATIONS

<TUNER>

ANT. Input ---------- 80 dBµV, Video: PAL 87.5%, Audio: 30 kHz dev (1 kHz Sin)
Test Input Signal ---------- 400Hz 30% modulation

Description	Condition	Unit	Nominal	Limit
1. Intermediate Freq.	Picture			
	PAL-BG/I/DK, SECAM-L	MHz	38.9	-
	SECAM-L'	MHz	33.9	-
	Sound			
	PAL-BG	MHz	33.4	-
	PAL-I	MHz	32.9	-
	PAL-DK, SECAM-L	MHz	32.4	-
	SECAM-L'	MHz	40.4	-
2. Video S/N (White 50%)	CH-3	dB	45	40
3. Audio S/N (Output Level 500mV)	–	dB	53	47

<LCD PANEL>

Description	Condition	Unit	Nominal	Limit
1. Number of Pixels	Horizontal	pixels	640 x 3	-
	Vertical	pixels	480	-
2. Brightness		cd/m^2	450	-
3. Response Time	-	msec	16	-
4. Support Color	-	-	16mil.(8bit)	-
5. Viewing Angle	Horizontal	°	-85 to 85	-
	Vertical	°	-85 to 70	

<VIDEO>

Description	Condition	Unit	Nominal	Limit
1. Over Scan	Horizontal	%	8.5	10±5
	Vertical	%	6.5	10±5
2. Color Temperature	-	°K	8500	-
	x		0.29	0.29±0.03
	y		0.30	0.30±0.03
3. Resolution	Horizontal	line	400	<250
	Vertical	line	350	<300

<AUDIO>

All items are measured across 8Ω load at speaker output terminal with L.P.F.

Description	Condition	Unit	Nominal	Limit
1. Audio Output Power	10% THD: Lch/Rch	W	0.95/0.95	0.75/0.75
2. Audio Distortion	500mW: Lch/Rch	%	0.6/0.6	<4
3. Audio Freq. Response	–6dB: Lch	Hz	50 to 12K	-
	–6dB: Rch	Hz	50 to 12K	-
4. Audio S/N	VIDEO 1	dB	43	40
	VIDEO 2	dB	55	40

Note:
Nominal specifications represent the design specifications. All units should be able to approximate these. Some will exceed and some may drop slightly below these specifications. Limit specifications represent the absolute worst condition that still might be considered acceptable. In no case should a unit fail to meet limit specifications.

IMPORTANT SAFETY PRECAUTIONS

Prior to shipment from the factory, our products are strictly inspected for recognized product safety and electrical codes of the countries in which they are to be sold. However, in order to maintain such compliance, it is equally important to implement the following precautions when a set is being serviced.

Safety Precautions for LCD TV Circuit

1. **Before returning an instrument to the customer,** always make a safety check of the entire instrument, including, but not limited to, the following items:
   - **a.** Be sure that no built-in protective devices are defective and have been defeated during servicing. (1) Protective shields are provided on this chassis to protect both the technician and the customer. Correctly replace all missing protective shields, including any removed for servicing convenience. (2) When reinstalling the chassis and/or other assembly in the cabinet, be sure to put back in place all protective devices, including but not limited to, nonmetallic control knobs, insulating fishpapers, adjustment and compartment covers/shields, and isolation resistor/capacitor networks. **Do not operate this instrument or permit it to be operated without all protective devices correctly installed and functioning. Servicers who defeat safety features or fail to perform safety checks may be liable for any resulting damage.**
   - **b.** Be sure that there are no cabinet openings through which an adult or child might be able to insert their fingers and contact a hazardous voltage. Such openings include, but are not limited to, (1) spacing between the LCD module and the cabinet mask, (2) excessively wide cabinet ventilation slots, and (3) an improperly fitted and/or incorrectly secured cabinet back cover.
   - **c. Antenna Cold Check -** With the instrument AC plug removed from any AC source, connect an electrical jumper across the two AC plug prongs. Place the instrument AC switch in the on position. Connect one lead of an ohmmeter to the AC plug prongs tied together and touch the other ohmmeter lead in turn to each tuner antenna input exposed terminal screw and, if applicable, to the coaxial connector. If the measured resistance is less than 1.0 megohm or greater than 5.2 megohm, an abnormality exists that must be corrected before the instrument is returned to the customer. Repeat this test with the instrument AC switch in the off position.
   - **d. Leakage Current Hot Check -** With the instrument completely reassembled, plug the AC line cord directly into a 230 V AC outlet. (Do not use an isolation transformer during this test.) Use a leakage current tester or a metering system that complies with American National Standards Institute (ANSI) C101.1 Leakage Current for Appliances and Underwriters Laboratories (UL) 1410, (50.7). With the instrument AC switch first in the on position and then in the off position, measure from a known earth ground (metal water pipe, conduit, etc.) to all exposed metal parts of the instrument (antennas, handle brackets, metal cabinet, screw heads, metallic overlays, control shafts, etc.), especially any exposed metal parts that offer an electrical return path to the chassis. Any current measured must not exceed 0.5 milli-ampere. Reverse the instrument power cord plug in the outlet and repeat the test.

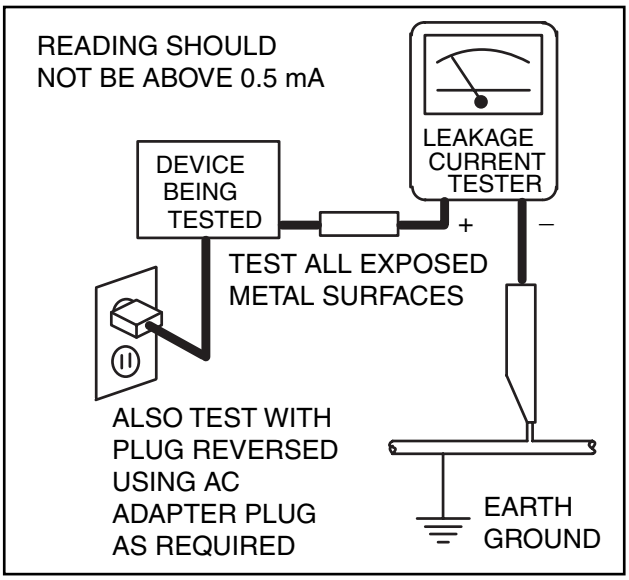

ANY MEASUREMENTS NOT WITHIN THE LIMITS SPECIFIED HEREIN INDICATE A POTENTIAL SHOCK HAZARD THAT MUST BE ELIMINATED BEFORE RETURNING THE INSTRUMENT TO THE CUSTOMER OR BEFORE CONNECTING THE ANTENNA OR ACCESSORIES.

2. Read and comply with all caution and safety-related notes on or inside the receiver cabinet, on the receiver chassis, or on the LCD module.
3. **Design Alteration Warning -** Do not alter or add to the mechanical or electrical design of this LCD TV receiver. Design alterations and additions, including, but not limited to circuit modifications and the addition of items such as auxiliary audio and/or video output connections, might alter the safety characteristics of this receiver and create a hazard to the user. Any design alterations or additions will void the manufacturer's warranty and may make you, the servicer, responsible for personal injury or property damage resulting therefrom.

4. **Hot Chassis Warning -**
   a. Some TV receiver chassis are electrically connected directly to one conductor of the AC power cord and maybe safety-serviced without an isolation transformer only if the AC power plug is inserted so that the chassis is connected to the ground side of the AC power source. To confirm that the AC power plug is inserted correctly, with an AC voltmeter, measure between the chassis and a known earth ground. If a voltage reading in excess of 1.0V is obtained, remove and reinsert the AC power plug in the opposite polarity and again measure the voltage potential between the chassis and a known earth ground.
   b. Some TV receiver chassis normally have 85V AC(RMS) between chassis and earth ground regardless of the AC plug polarity. This chassis can be safety-serviced only with an isolation transformer inserted in the power line between the receiver and the AC power source, for both personnel and test equipment protection.
   c. Some TV receiver chassis have a secondary ground system in addition to the main chassis ground. This secondary ground system is not isolated from the AC power line. The two ground systems are electrically separated by insulation material that must not be defeated or altered.
5. Observe original lead dress. Take extra care to assure correct lead dress in the following areas: a. near sharp edges, b. near thermally hot parts-be sure that leads and components do not touch thermally hot parts, c. the AC supply, d. high voltage, and, e. antenna wiring. Always inspect in all areas for pinched, out of place, or frayed wiring. Check AC power cord for damage.
6. Components, parts, and/or wiring that appear to have overheated or are otherwise damaged should be replaced with components, parts, or wiring that meet original specifications. Additionally, determine the cause of overheating and/or damage and, if necessary, take corrective action to remove any potential safety hazard.
7. **Product Safety Notice -** Some electrical and mechanical parts have special safety-related characteristics which are often not evident from visual inspection, nor can the protection they give necessarily be obtained by replacing them with components rated for higher voltage, wattage, etc.. Parts that have special safety characteristics are identified by a ⚠ on schematics and in parts lists. Use of a substitute replacement that does not have the same safety characteristics as the recommended replacement part might create shock, fire, and/or other hazards. The product's safety is under review continuously and new instructions are issued whenever appropriate. Prior to shipment from the factory, our products are strictly inspected to confirm they comply with the recognized product safety and electrical codes of the countries in which they are to be sold. However, in order to maintain such compliance, it is equally important to implement the following precautions when a set is being serviced.

Precautions during Servicing

A. Parts identified by the ⚠ symbol are critical for safety.
Replace only with part number specified.

B. In addition to safety, other parts and assemblies are specified for conformance with regulations applying to spurious radiation. These must also be replaced only with specified replacements.
Examples: RF converters, RF cables, noise blocking capacitors, and noise blocking filters, etc.

C. Use specified internal wiring. Note especially:

1) Wires covered with PVC tubing
2) Double insulated wires
3) High voltage leads

D. Use specified insulating materials for hazardous live parts. Note especially:

1) Insulation Tape
2) PVC tubing
3) Spacers
4) Insulators for transistors.

E. When replacing AC primary side components (transformers, power cord, etc.), wrap ends of wires securely about the terminals before soldering.

F. Observe that the wires do not contact heat producing parts (heat sinks, oxide metal film resistors, fusible resistors, etc.)

G. Check that replaced wires do not contact sharp edged or pointed parts.

H. When a power cord has been replaced, check that 5~6 kg of force in any direction will not loosen it.

I. Also check areas surrounding repaired locations.

J. Use care that foreign objects (screws, solder droplets, etc.) do not remain inside the set.

K. Crimp type wire connector
The power transformer uses crimp type connectors which connect the power cord and the primary side of the transformer. When replacing the transformer, follow these steps carefully and precisely to prevent shock hazards.
Replacement procedure

1) Remove the old connector by cutting the wires at a point close to the connector.
Important: Do not re-use a connector (discard it).
2) Strip about 15 mm of the insulation from the ends of the wires. If the wires are stranded, twist the strands to avoid frayed conductors.
3) Align the lengths of the wires to be connected. Insert the wires fully into the connector.
4) Use the crimping tool to crimp the metal sleeve at the center position. Be sure to crimp fully to the complete closure of the tool.

L. When connecting or disconnecting the internal connectors, first, disconnect the AC plug from the AC supply outlet.

M. When installing parts or assembling the cabinet parts, be sure to use the proper screws and tighten certainly.

Safety Check after Servicing

Examine the area surrounding the repaired location for damage or deterioration. Observe that screws, parts and wires have been returned to original positions. Afterwards, perform the following tests and confirm the specified values in order to verify compliance with safety standards.

1. Clearance Distance

When replacing primary circuit components, confirm specified clearance distance (d) and (d') between soldered terminals, and between terminals and surrounding metallic parts. (See Fig. 1)

Table 1 : Ratings for selected area

AC Line Voltage	Clearance Distance (d), (d')
230 V	≥ 3mm(d) ≥ 6 mm(d')

Note: This table is unofficial and for reference only. Be sure to confirm the precise values.

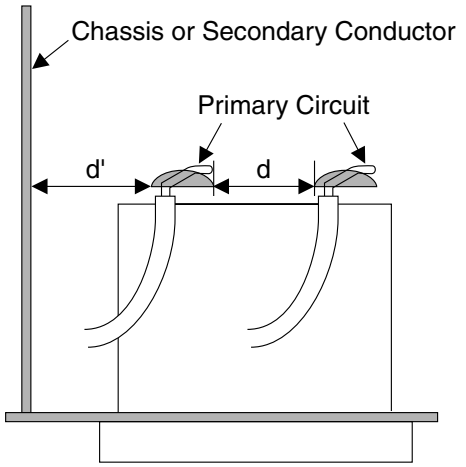

Fig. 1

2. Leakage Current Test

Confirm the specified (or lower) leakage current between B (earth ground, power cord plug prongs) and externally exposed accessible parts (RF terminals, antenna terminals, video and audio input and output terminals, microphone jacks, earphone jacks, etc.).

Measuring Method : (Power ON)

Insert load Z between B (earth ground, power cord plug prongs) and exposed accessible parts. Use an AC voltmeter to measure across both terminals of load Z. See Fig. 2 and following table.

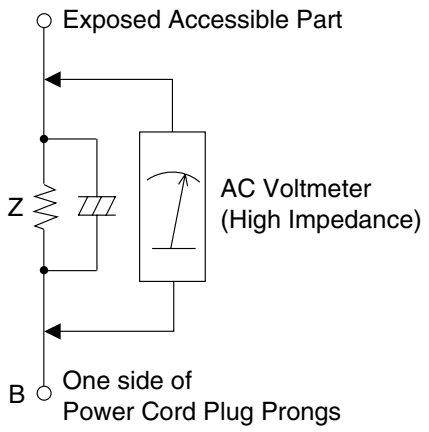

Fig. 2

Table 2: Leakage current ratings for selected areas

AC Line Voltage	Load Z	Leakage Current (i)	One side of power cord plug prongs (B) to:
230 V	2kΩ RES. Connected in parallel	i≤0.7mA AC Peak i≤2mA DC	RF or Antenna terminals
	50kΩ RES. Connected in parallel	i≤0.7mA AC Peak i≤2mA DC	A/V Input, Output

Note: This table is unofficial and for reference only. Be sure to confirm the precise values.

STANDARD NOTES FOR SERVICING

Circuit Board Indications

1. The output pin of the 3 pin Regulator ICs is indicated as shown.

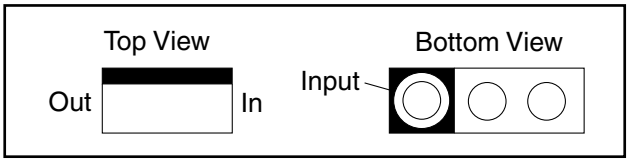

2. For other ICs, pin 1 and every fifth pin are indicated as shown.

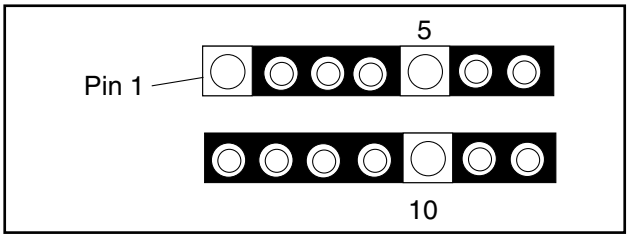

3. The 1st pin of every male connector is indicated as shown.

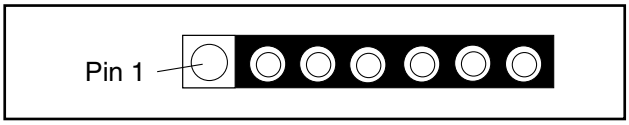

Pb (Lead) Free Solder

Pb free mark will be found on PCBs which use Pb free solder. (Refer to figure.) For PCBs with Pb free mark, be sure to use Pb free solder. For PCBs without Pb free mark, use standard solder.

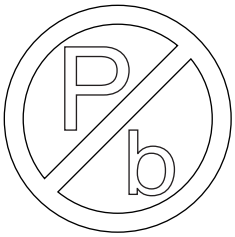

Pb free mark

How to Remove / Install Flat Pack-IC

1. Removal

With Hot-Air Flat Pack-IC Desoldering Machine:

1. Prepare the hot-air flat pack-IC desoldering machine, then apply hot air to the Flat Pack-IC (about 5 to 6 seconds). (Fig. S-1-1)

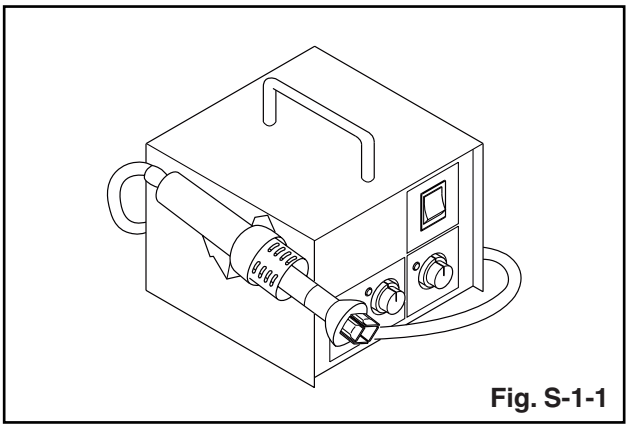

Fig. S-1-1

2. Remove the flat pack-IC with tweezers while applying the hot air.
3. Bottom of the flat pack-IC is fixed with glue to the CBA; when removing entire flat pack-IC, first apply soldering iron to center of the flat pack-IC and heat up. Then remove (glue will be melted). (Fig. S-1-6)
4. Release the flat pack-IC from the CBA using tweezers. (Fig. S-1-6)

CAUTION:

1. The Flat Pack-IC shape may differ by models. Use an appropriate hot-air flat pack-IC desoldering machine, whose shape matches that of the Flat Pack-IC.
2. Do not supply hot air to the chip parts around the flat pack-IC for over 6 seconds because damage to the chip parts may occur. Put masking tape around the flat pack-IC to protect other parts from damage. (Fig. S-1-2)
3. The flat pack-IC on the CBA is affixed with glue, so be careful not to break or damage the foil of each pin or the solder lands under the IC when removing it.

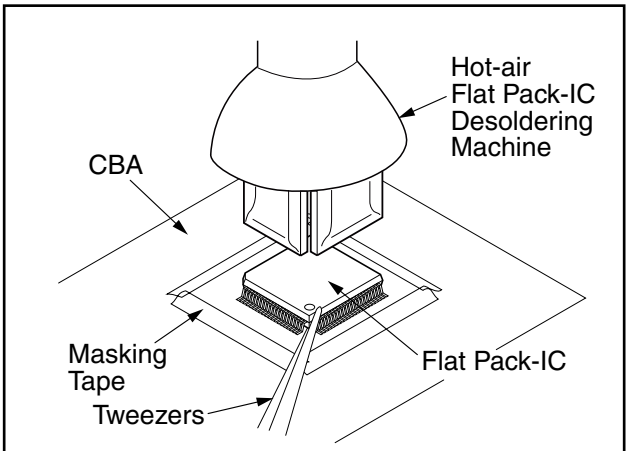

Fig. S-1-2

With Soldering Iron:

1. Using desoldering braid, remove the solder from all pins of the flat pack-IC. When you use solder flux which is applied to all pins of the flat pack-IC, you can remove it easily. (Fig. S-1-3)

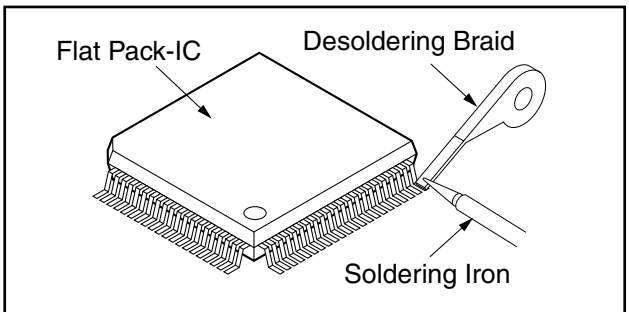

Fig. S-1-3

2. Lift each lead of the flat pack-IC upward one by one, using a sharp pin or wire to which solder will not adhere (iron wire). When heating the pins, use a fine tip soldering iron or a hot air desoldering machine. (Fig. S-1-4)

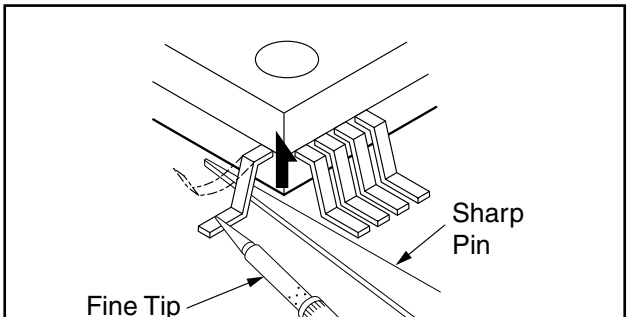

Fig. S-1-4

3. Bottom of the flat pack-IC is fixed with glue to the CBA; when removing entire flat pack-IC, first apply soldering iron to center of the flat pack-IC and heat up. Then remove (glue will be melted). (Fig. S-1-6)
4. Release the flat pack-IC from the CBA using tweezers. (Fig. S-1-6)

With Iron Wire:

1. Using desoldering braid, remove the solder from all pins of the flat pack-IC. When you use solder flux which is applied to all pins of the flat pack-IC, you can remove it easily. (Fig. S-1-3)
2. Affix the wire to a workbench or solid mounting point, as shown in Fig. S-1-5.
3. While heating the pins using a fine tip soldering iron or hot air blower, pull up the wire as the solder melts so as to lift the IC leads from the CBA contact pads as shown in Fig. S-1-5.
4. Bottom of the flat pack-IC is fixed with glue to the CBA; when removing entire flat pack-IC, first apply soldering iron to center of the flat pack-IC and heat up. Then remove (glue will be melted). (Fig. S-1-6)
5. Release the flat pack-IC from the CBA using tweezers. (Fig. S-1-6)

Note: When using a soldering iron, care must be taken to ensure that the flat pack-IC is not being held by glue. When the flat pack-IC is removed from the CBA, handle it gently because it may be damaged if force is applied.

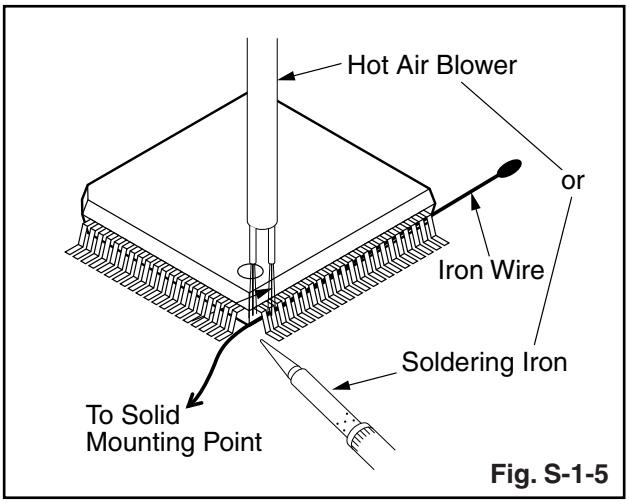

Fig. S-1-5

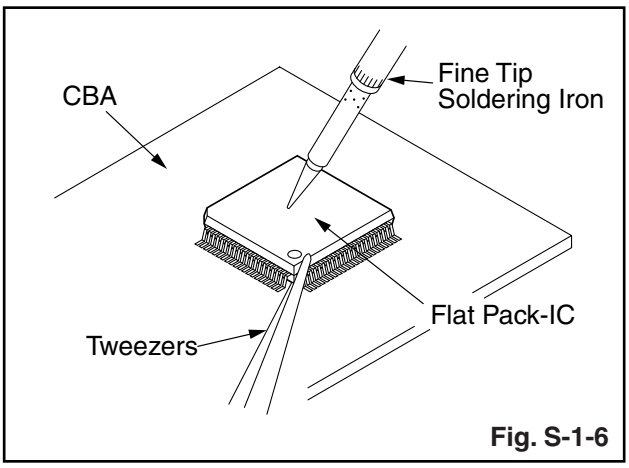

Fig. S-1-6

2. Installation

1. Using desoldering braid, remove the solder from the foil of each pin of the flat pack-IC on the CBA so you can install a replacement flat pack-IC more easily.
2. The "●" mark on the flat pack-IC indicates pin 1. (See Fig. S-1-7.) Be sure this mark matches the 1 on the PCB when positioning for installation. Then presolder the four corners of the flat pack-IC. (See Fig. S-1-8.)
3. Solder all pins of the flat pack-IC. Be sure that none of the pins have solder bridges.

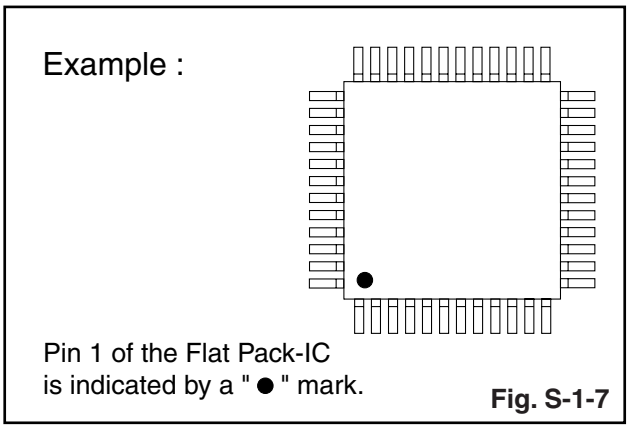

Fig. S-1-7

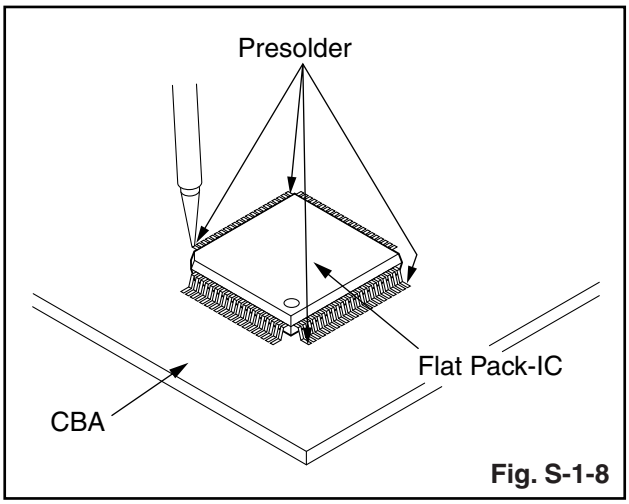

Fig. S-1-8

Instructions for Handling Semi-conductors

Electrostatic breakdown of the semi-conductors may occur due to a potential difference caused by electrostatic charge during unpacking or repair work.

1. Ground for Human Body

Be sure to wear a grounding band (1 MΩ) that is properly grounded to remove any static electricity that may be charged on the body.

2. Ground for Workbench

Be sure to place a conductive sheet or copper plate with proper grounding (1 MΩ) on the workbench or other surface, where the semi-conductors are to be placed. Because the static electricity charge on clothing will not escape through the body grounding band, be careful to avoid contacting semi-conductors with your clothing.

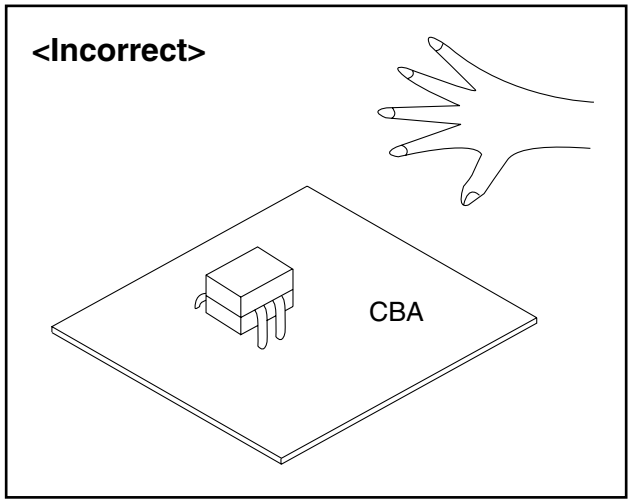

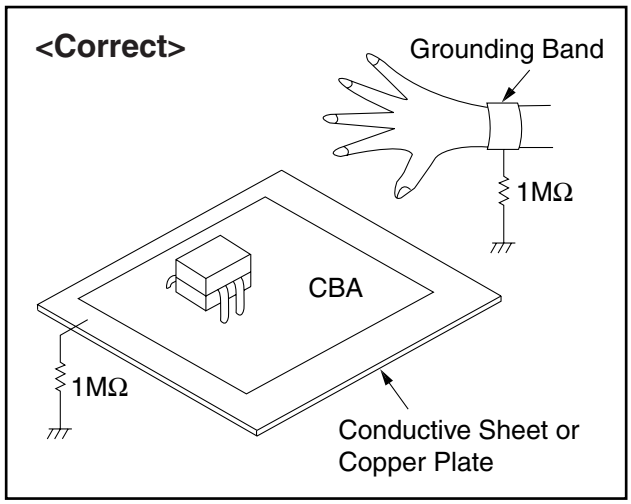

CABINET DISASSEMBLY INSTRUCTIONS

1. Disassembly Flowchart

This flowchart indicates the disassembly steps for the cabinet parts, and the CBA in order to gain access to item(s) to be serviced. When reassembling, follow the steps in reverse order. Bend, route and dress the cables as they were.

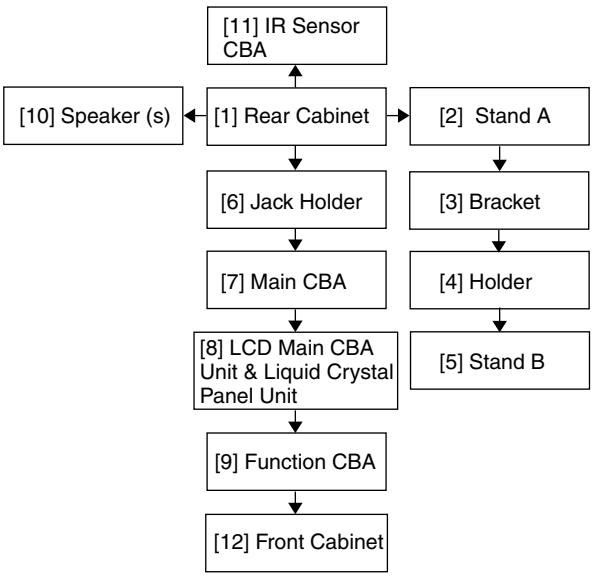

2. Disassembly Method

Step/ Loc. No.	Part	Removal		
		Fig. No.	Remove/*Unhook/ Unlock/Release/ Unplug/Unclamp/ Desolder	Note
[1]	Rear Cabinet	D1	9(S-1), 2(S-2)	---
[2]	Stand A	D1	4(S-3)	---
[3]	Bracket	D1	4(S-4), Shaft	---
[4]	Holder	D1	4(S-5)	---
[5]	Stand B	D1	----------	---
[6]	Jack Holder	D2	3(S-6), (S-7)	---
[7]	Main CBA	D2 D3	9(S-8), *CN53, *CN101B, *CN102B, *CN103B, *CN401, *CN403, *CN801, *CN802	---
[8]	LCD Main CBA Unit & Liquid Crystal Panel Unit	D2	11(S-9), *CN106	---
[9]	Function CBA	D2	5(S-10)	---
[10]	Speaker (s)	D2	4(S-11), Speaker Holder (s)	---
[11]	IR Sensor CBA	D2	(S-12)	---
[12]	Front Cabinet	D2	----------	---
↓ (1)	↓ (2)	↓ (3)	↓ (4)	↓ (5)

Note:

(1) Order of steps in procedure. When reassembling, follow the steps in reverse order. These numbers are also used as the Identification (location) No. of parts in figures.

(2) Parts to be removed or installed.

(3) Fig. No. showing procedure of part location

(4) Identification of parts to be removed, unhooked, unlocked, released, unplugged, unclamped, or desoldered.
P = Spring, L = Locking Tab, S = Screw,
CN = Connector
* = Unhook, Unlock, Release, Unplug, or Desolder
e.g. 2(S-2) = two Screws (S-2),
2(L-2) = two Locking Tabs (L-2)

(5) Refer to the following "Reference Notes in the Table."

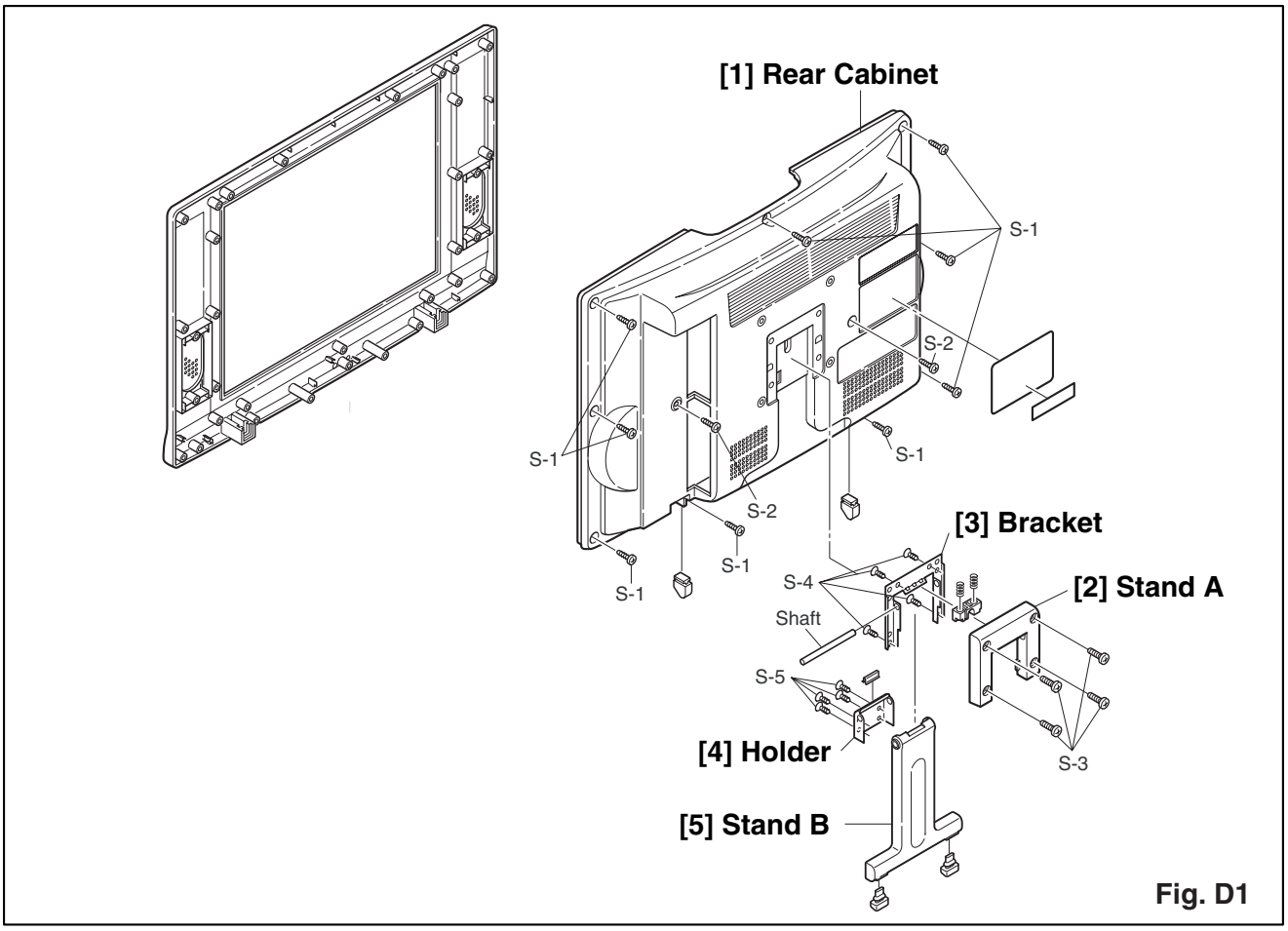
[1] Rear Cabinet
S-1
S-2
S-1
S-1
S-2
S-1
S-1
[3] Bracket
S-4
[2] Stand A
Shaft
S-5
[4] Holder
S-3
[5] Stand B
Fig. D1

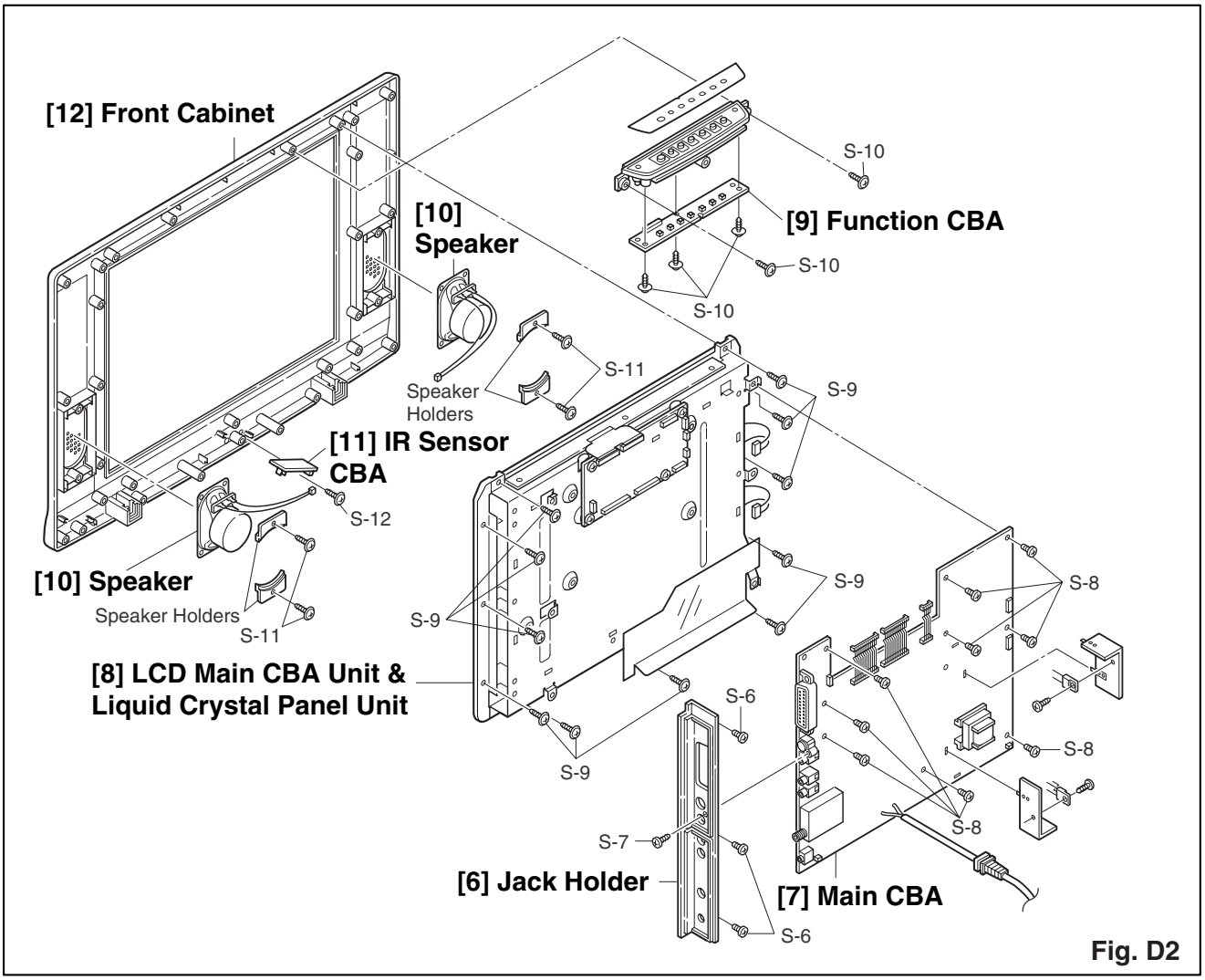
[12] Front Cabinet
[10]
Speaker
S-10
[9] Function CBA
S-10
S-10
S-11
Speaker
Holders
S-9
[11] IR Sensor
CBA
S-12
[10] Speaker
Speaker Holders
S-11
S-9
S-9
S-8
[8] LCD Main CBA Unit &
Liquid Crystal Panel Unit
S-6
S-8
S-9
S-8
S-7
[6] Jack Holder
[7] Main CBA
S-6

Fig. D2

TV Cable Wiring Diagram

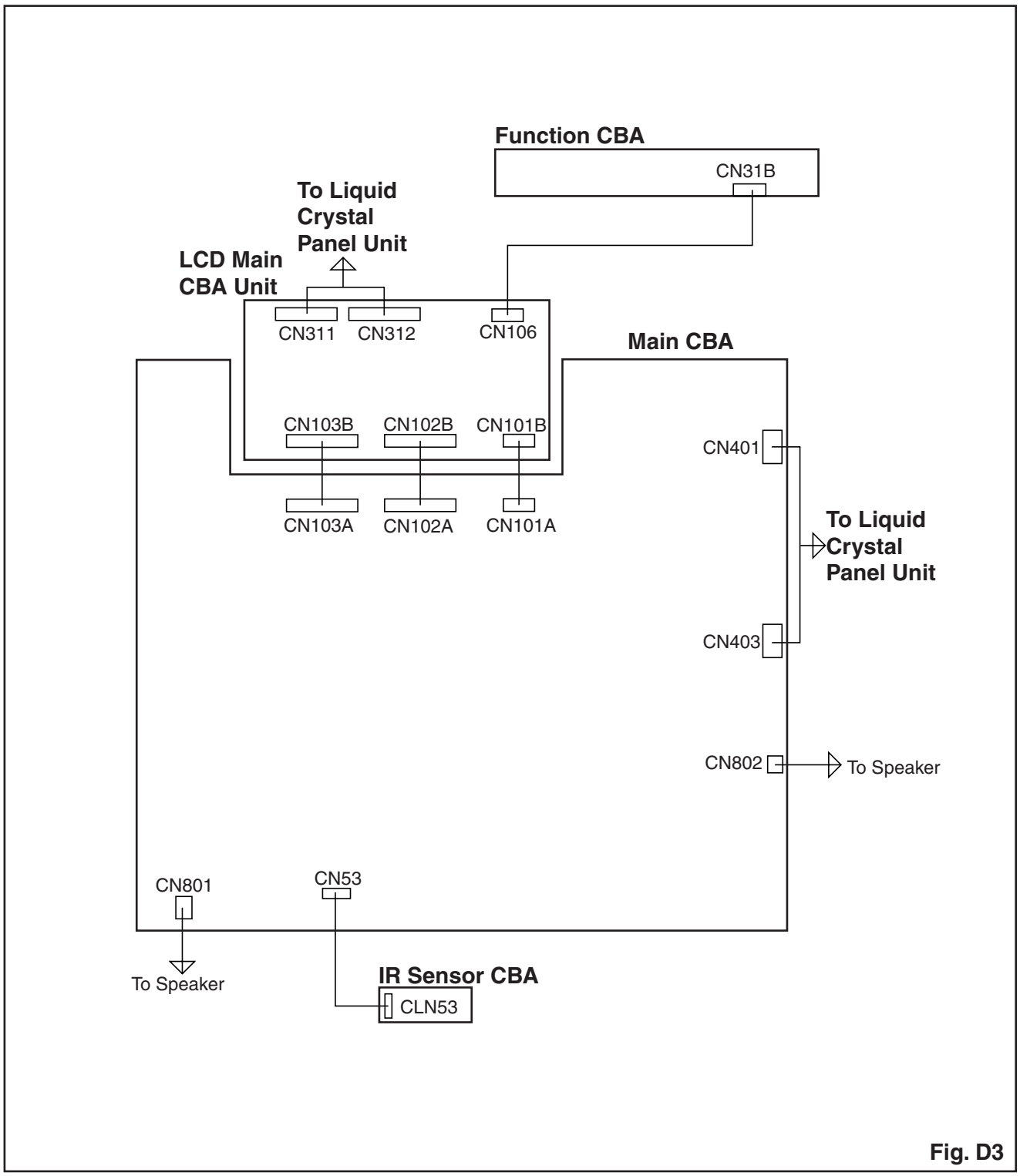

Fig. D3

HOW TO INITIALIZE THE LCD TELEVISION

To put the program back at the factory-default, initialize the LCD television as the following procedure.

How to initialize the LCD television:

1. Turn the power on. (Use main power on the TV unit.)
2. To enter the service mode, press [STANDBY], [2], [7], [1], and [MUTE] buttons on the remote control unit in that order within 5 seconds.
   - To cancel the service mode, press [STANDBY] button on the remote control.
3. To initialize the LCD television, press “DISPLAY” button on the remote control unit.
4. Confirm "FF" indication on the upper right of the screen.

ELECTRICAL ADJUSTMENT INSTRUCTIONS

General Note:

"CBA" is abbreviation for "Circuit Board Assembly."

NOTE:

Electrical adjustments are required after replacing circuit components and certain mechanical parts. It is important to perform these adjustments only after all repairs and replacements have been completed. Also, do not attempt these adjustments unless the proper equipment is available.

Test Equipment Required

1. DC Voltmeter
2. Pattern Generator
3. Color Analyzer

How to Set up the Service mode:

1. Turn the power on. (Use main power on the TV unit.)
2. Press [STANDBY], [2], [7], [1], and [MUTE] buttons on the remote control unit in that order within 5 seconds.

- To cancel the service mode, press [STANDBY] button on the remote control.

1. Initial Setting

General

Enter the Service mode.

Set the each initial data as shown on table 1 below.

Table 1: Initial Data

ITEM	BUTTON (on the remote control)	DATA VALUE
BRT(PAL)	MENU → 1	133
CNT(PAL)		140
CLR-R(PAL)		88
CLR-B(PAL)		88
SHR(PAL)		143
S-BRT(PAL)	MENU → 2	131
S-CNT(PAL)		140
S-CLR-R(PAL)		74
S-CLR-B(PAL)		74
S-SHR(PAL)		143
C-BRT(PAL)	MENU → 3	128
C-CNT(PAL)		128
C-CLR-R(PAL)		150
C-CLR-B(PAL)		150
C-SHR(PAL)		143
BRT(SECAM)	MENU → 4	133
CNT(SECAM)		140
CLR-R(SECAM)		88
CLR-B(SECAM)		88
SHR(SECAM)		143
S-BRT(SECAM)	MENU → 5	131
S-CNT(SECAM)		140
S-CLR-R(SECAM)		74
S-CLR-B(SECAM)		74
S-SHR(SECAM)		143
C-BRT(SECAM)	MENU → 6	128
C-CNT(SECAM)		128
C-CLR-R(SECAM)		150
C-CLR-B(SECAM)		150
C-SHR(SECAM)		143
BRT(NTSC)	MENU → 7	131
CNT(NTSC)		138
CLR-R(NTSC)		74
CLR-B(NTSC)		74
TNT(NTSC)		131
SHR(NTSC)		143
S-BRT(NTSC)	MENU → 8	128
S-CNT(NTSC)		140
S-CLR-R(NTSC)		74
S-CLR-B(NTSC)		74
S-TNT(NTSC)		131
S-SHR(NTSC)		143

ITEM	BUTTON (on the remote control)	DATA VALUE
C-BRT(NTSC)	MENU → 9	128
C-CNT(NTSC)		128
C-CLR-R(NTSC)		150
C-CLR-B(NTSC)		150
C-TNT(NTSC)		131
C-SHR(NTSC)		143
BRIGHT	0	0
NORMAL	0	40
DARK	0	95
COR(C/D/S-1)	VOL. ▼ → 1	128
COG(C/D/S-1)	VOL. ▼ → 2	128
COB(C/D/S-1)	VOL. ▼ → 3	128
DR(C/D/S-1)	VOL. ▼ → 4	180
DG(C/D/S-1)	VOL. ▼ → 5	180
DB(C/D/S-1)	VOL. ▼ → 6	180
SBR(C/D/S-1)	VOL. ▼ → 7	0
SBB(C/D/S-1)	VOL. ▼ → 9	0
C-COR(C/D/S-2)	VOL. ▼ → 1	128
C-COG(C/D/S-2)	VOL. ▼ → 2	128
C-COB(C/D/S-2)	VOL. ▼ → 3	128
C-DR(C/D/S-2)	VOL. ▼ → 4	150
C-DG(C/D/S-2)	VOL. ▼ → 5	150
C-DB(C/D/S-2)	VOL. ▼ → 6	150
C-SBR(C/D/S-2)	VOL. ▼ → 7	0
C-SBB(C/D/S-2)	VOL. ▼ → 9	0
7F	VOL. ▼	FF
LAST POWER		OFF
SYSTEM		*1
NCM		ON
ASPECT		OFF
RUSSIAN		OFF

*1 PAL-BG (LCD-A1506), PAL-I (LCD-B1506), SECAM-L (LCD-C1506), PAL-BG/DK (LCD-D1506)

2. Flicker Adjustment

1. Enter the Service mode. (See page 6-1.)
2. Press [2] button on the remote control unit. The following screen appears.

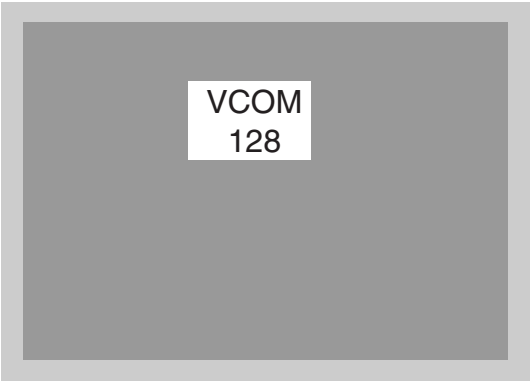

3. If Flicker Adjustment is not fit, the screen becomes the following.

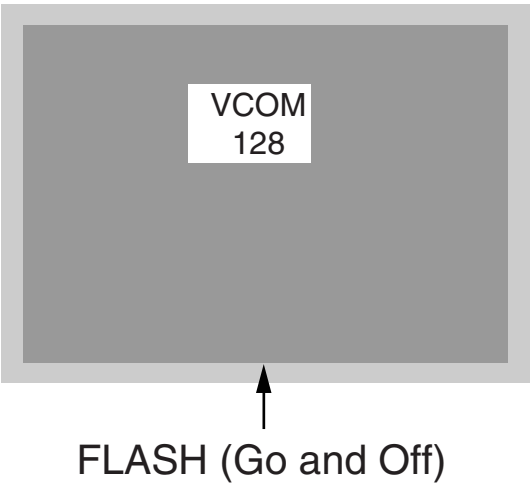

4. Press [CH. ▲ / ▼] buttons on the remote control unit so that flash stops.

The following adjustment normally are not attempted in the field. Only when replacing the LCD Panel then adjust as a preparation.

3. White Balance Adjustment

Purpose: To mix red, green and blue beams correctly for pure white.

Symptom of Misadjustment: White becomes bluish or reddish.

Test Point	Adj. Point	Mode	Input
Screen	VOL. ▼ buttons	**[RF/AV2(CVBS)]** C/D/S-1 **[AV1(RGB)]** C/D/S-2	White Purity (APL 80%) or (APL 40%)
M. EQ.		Spec.	
Pattern Generator, Color analyzer		x: 285 to 295, y: 295 to 305	
Figure			

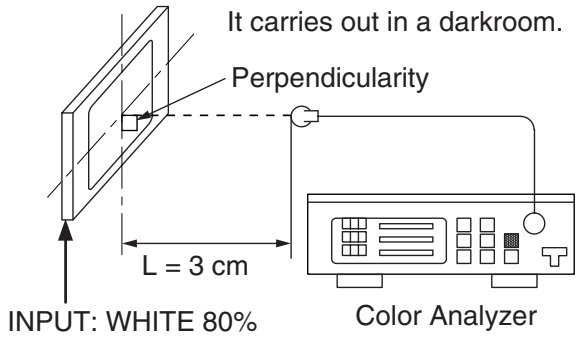

1. Operate the unit for more than 20 minutes.
2. Input the White Purity.
3. Set the color analyzer to the CHROMA mode and bring the optical receptor to the center on the LCD-Panel surface after zero point calibration as shown above.
   Note: The optical receptor must be set perpendicularly to the LCD Panel surface.
4. **[RF/AV2(CVBS)]**
   Enter the Service mode. Press "VOL ▼" button on the remote control unit and select "C/D/S-1" mode.
   [AV1(RGB)]
   Enter the Service mode. Press "VOL ▼" button on the remote control unit and select "C/D/S-2" mode.
5. **[RF/AV2(CVBS)]----(APL 80%)**
   Press "6" button to select "DB(C/D/S-1)" for Blue adjustment. Press "4" button to select "DR(C/D/S-1)" for Red adjustment. When "x" value and "y" value are not within specification, adjust "DB (C/D/S-1)" or "DR (C/D/S-1)". Refer to "1. Initial Setting."
   [RF/AV2(CVBS)]----(APL 40%)
   Press "3" button to select "COB(C/D/S-1)" for Blue adjustment. Press "1" button to select "COR(C/D/S-1)" for Red adjustment. When "x" value and "y" value are not within specification, adjust "COB (C/D/S-1)" or "COR (C/D/S-1)". Refer to "1. Initial Setting."
6. **[AV1(RGB)]----(APL 80%)**
   Press "6" button to select "C-DB(C/D/S-2)" for Blue adjustment. Press "4" button to select "C-DR(C/D/S-2)" for Red adjustment.When "x" value and "y" value are not within specification, adjust "C-DB(C/D/S-2)" or "C-DR(C/D/S-2)". Refer to "1. Initial Setting."
   [AV1(RGB)]----(APL 40%)
   Press "3" button to select "C-COB(C/D/S-2)" for Blue adjustment. Press "1" button to select "C-COR(C/D/S-2)" for Red adjustment.When "x" value and "y" value are not within specification, adjust "C-COB(C/D/S-2)" or "C-COR(C/D/S-2)". Refer to "1. Initial Setting."
7. Turn the power off and on again. (Main power button on the TV unit.)

BLOCK DIAGRAMS

System Control Block Diagram

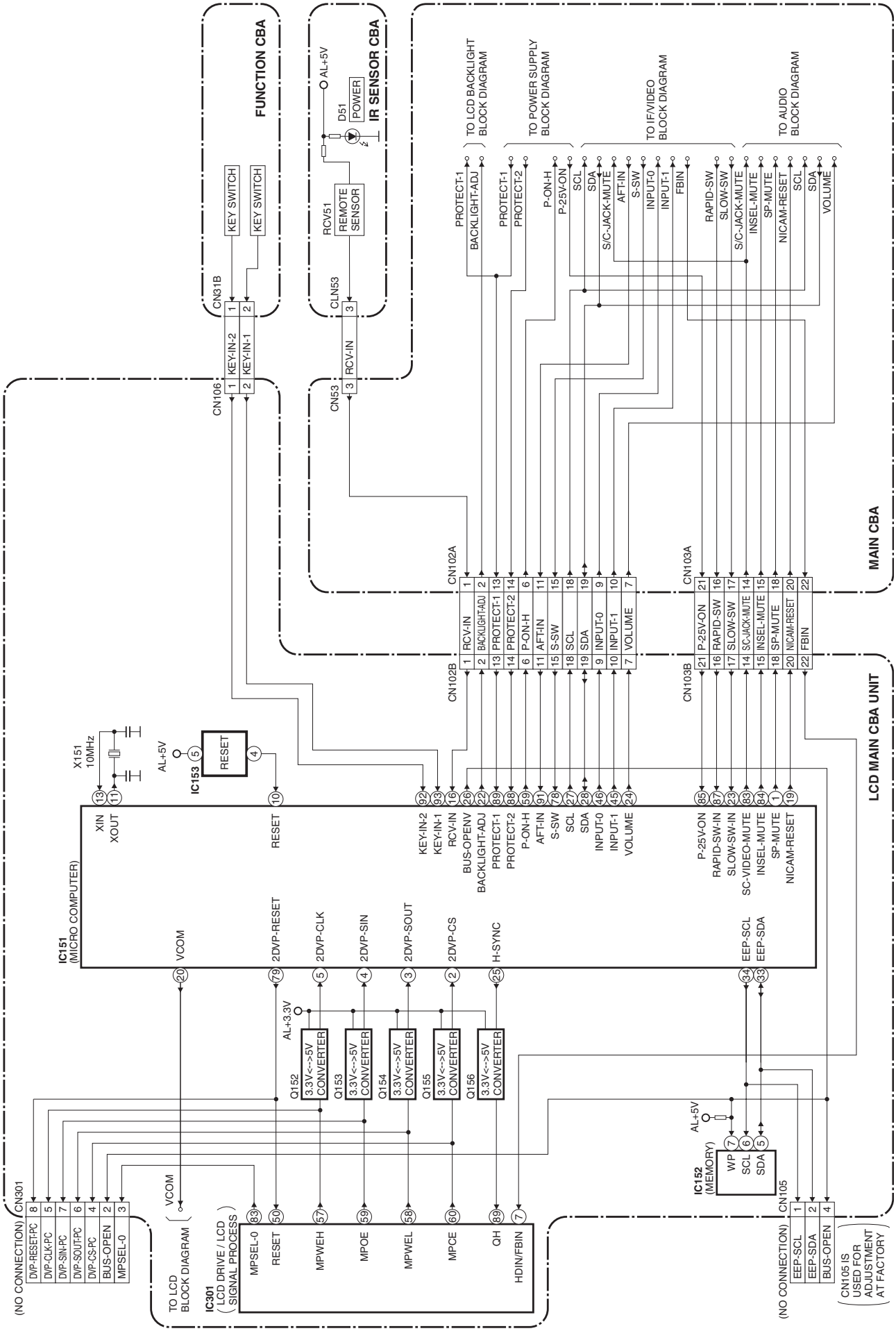

IF/Video Block Diagram

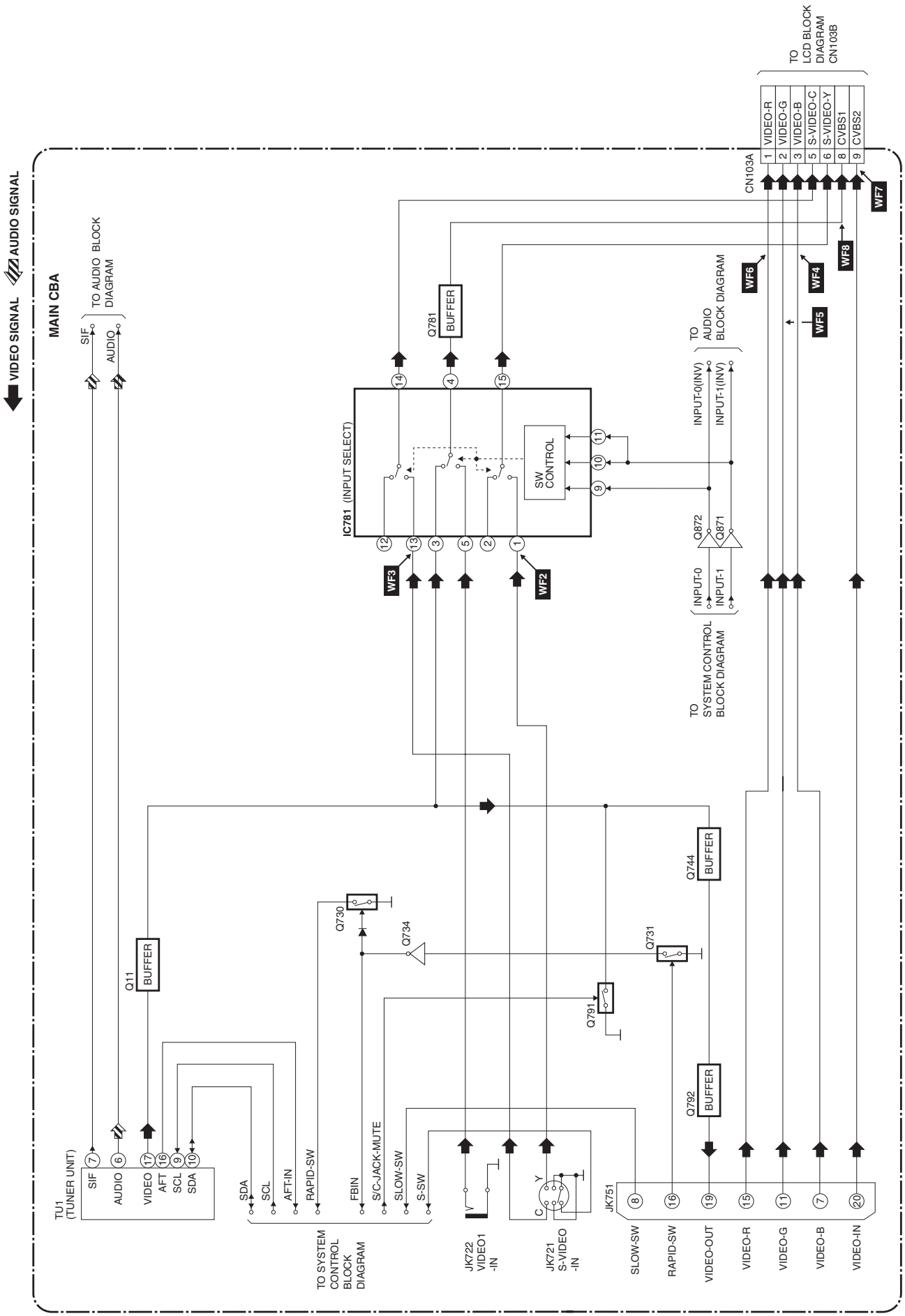

Audio Block Diagram

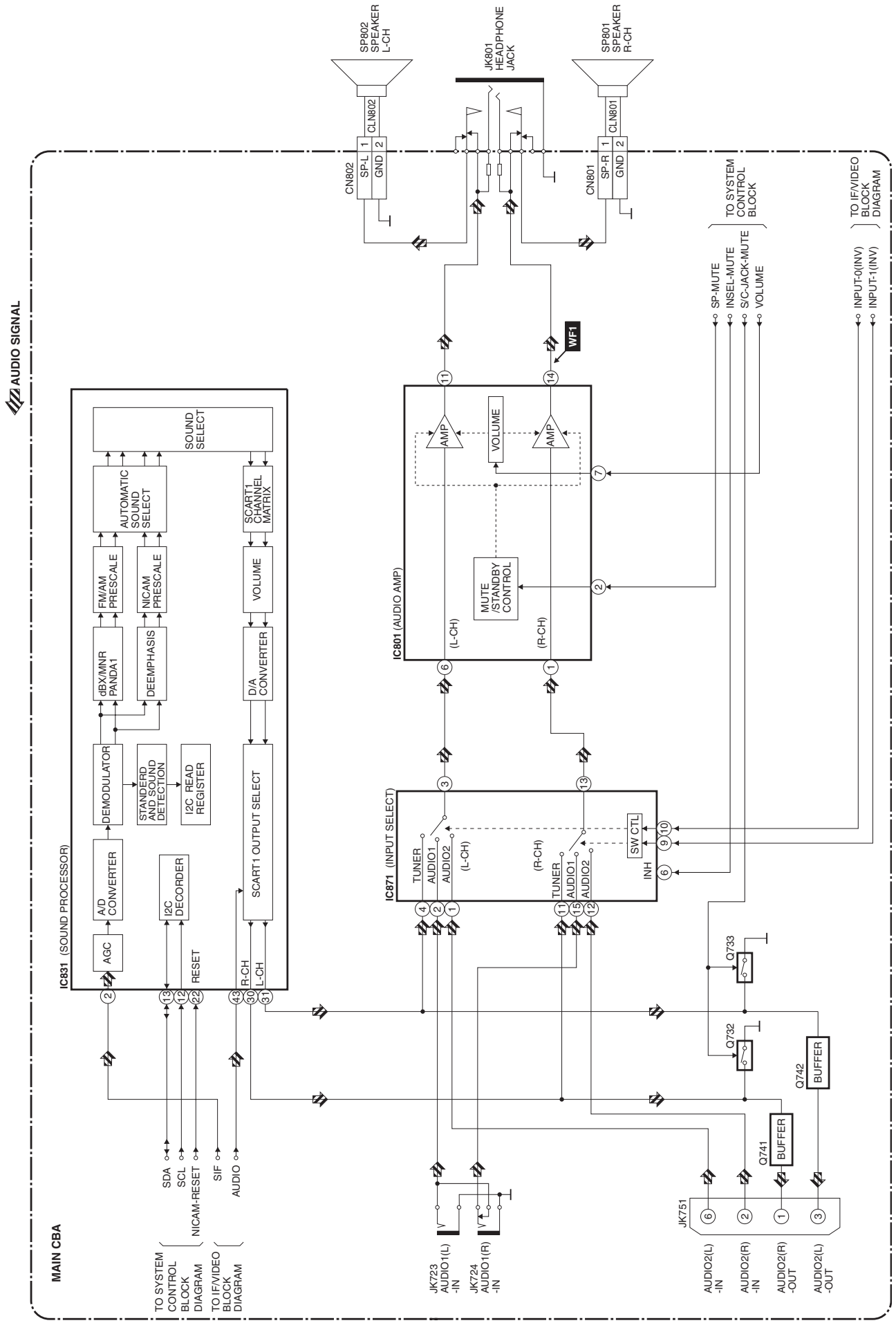

LCD Block Diagram

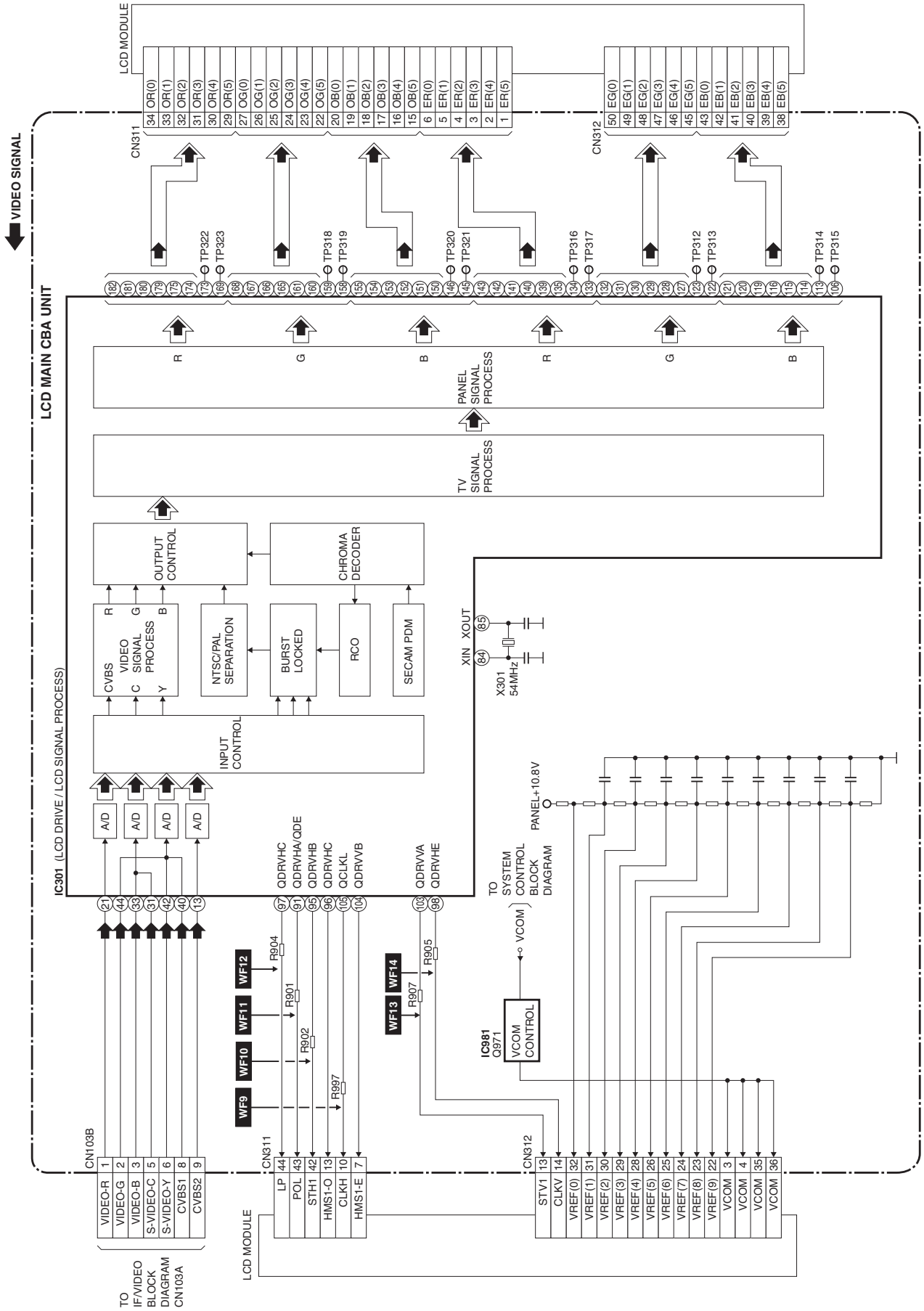

Power Supply Block Diagram

NOTE:
The voltage for parts in hot circuit is measured using hot GND as a common terminal.

CAUTION !
For continued protection against fire hazard, replace only with the same type fuse.

CAUTION !
Fixed voltage (or Auto voltage selectable) power supply circuit is used in this unit. If Main Fuse (F601) is blown , check to see that all components in the power supply circuit are not defective before you connect the AC plug to the AC power supply. Otherwise it may cause some components in the power supply circuit to fail.

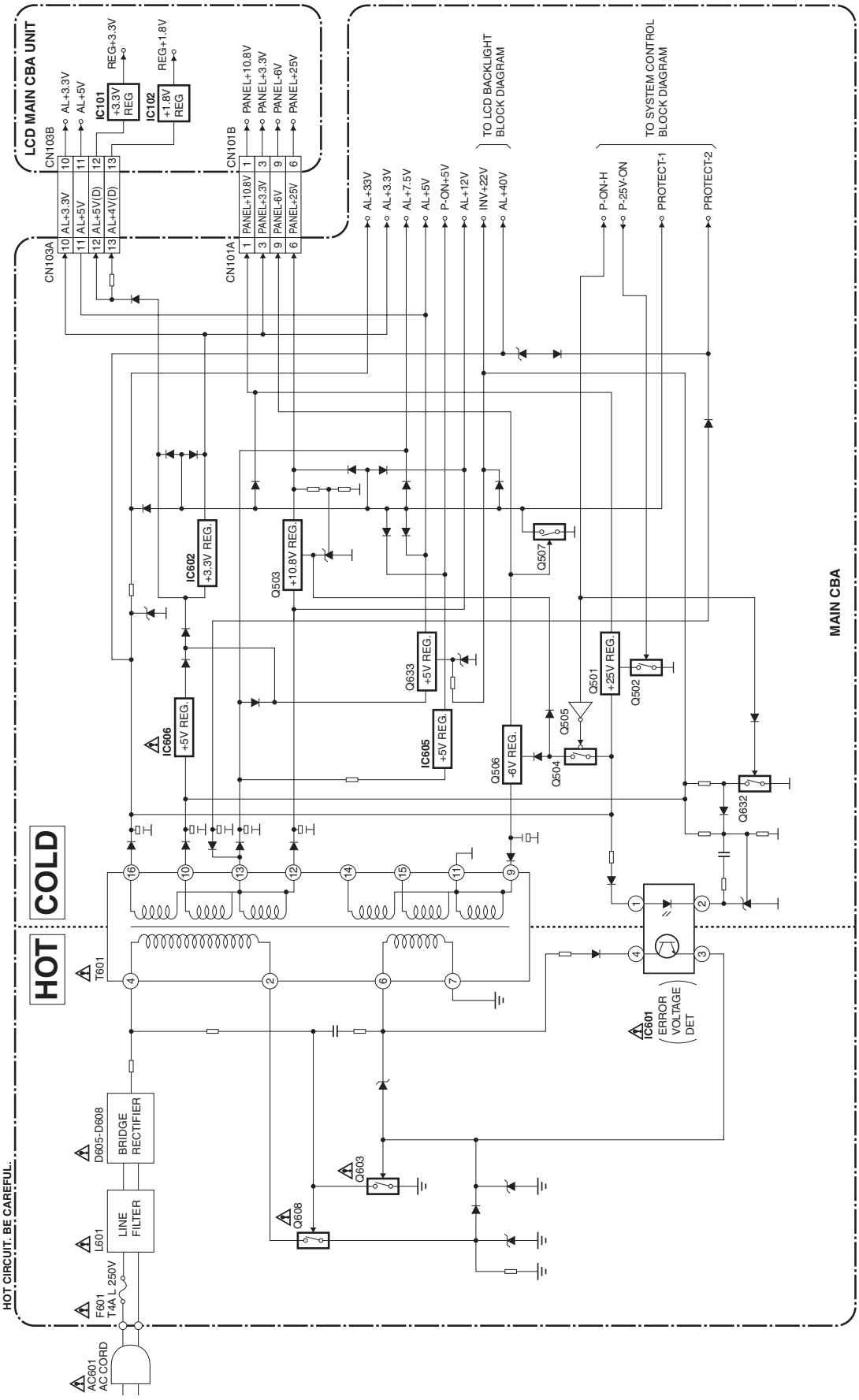

LCD Backlight Block Diagram

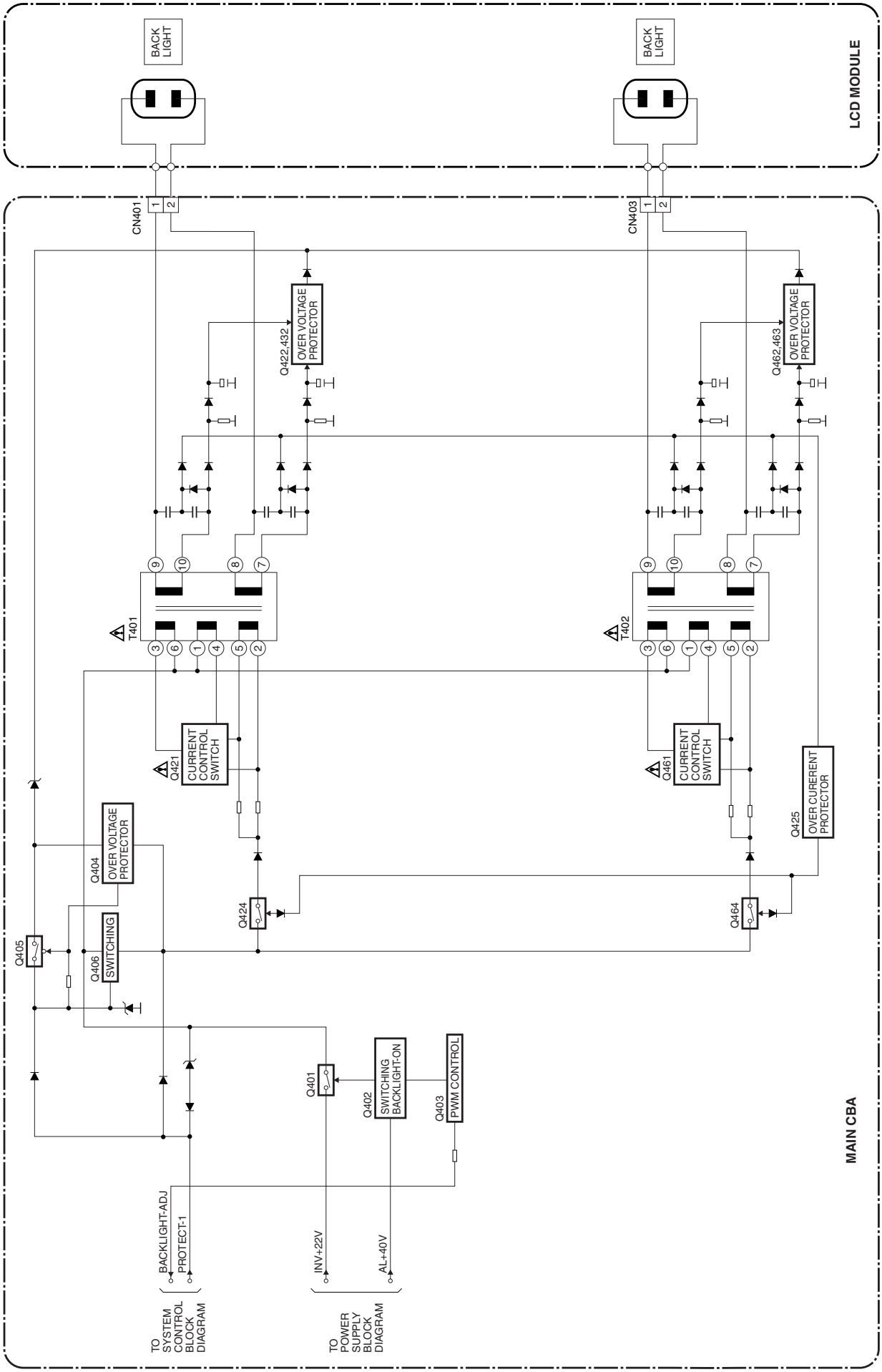

SCHEMATIC DIAGRAMS / CBA'S AND TEST POINTS

Standard Notes

Many electrical and mechanical parts in this chassis have special characteristics. These characteristics often pass unnoticed and the protection afforded by them cannot necessarily be obtained by using replacement components rated for higher voltage, wattage, etc. Replacement parts that have these special safety characteristics are identified in this manual and its supplements; electrical components having such features are identified by the mark "⚠" in the schematic diagram and the parts list. Before replacing any of these components, read the parts list in this manual carefully. The use of substitute replacement parts that do not have the same safety characteristics as specified in the parts list may create shock, fire, or other hazards.

Notes:

1. Do not use the part number shown on these drawings for ordering. The correct part number is shown in the parts list, and may be slightly different or amended since these drawings were prepared.
2. All resistance values are indicated in ohms (K = 10^3, M = 10^6).
3. Resistor wattages are 1/4W or 1/6W unless otherwise specified.
4. All capacitance values are indicated in μF (P = 10^{-6} μF).
5. All voltages are DC voltages unless otherwise specified.

Note of Capacitors:

ML --- Mylar Cap. PP --- Metallized Film Cap. SC --- Semiconductor Cap. L --- Low Leakage type

Temperature Characteristics of Capacitors are noted with the following:

B --- ±10% CH --- 0±60 ppm/°C CSL --- +350~-1000 ppm/°C

Tolerance of Capacitors are noted with the following:

Z --- +80~-20%

Note of Resistors:

CEM --- Cement Res. MTL --- Metal Res. F --- Fuse Res.

Capacitors and transistors are represented by the following symbols.

CBA Symbols

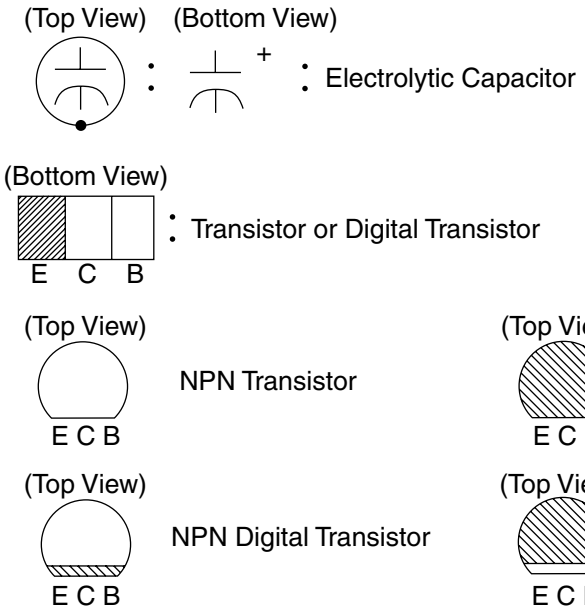

Schematic Diagram Symbols

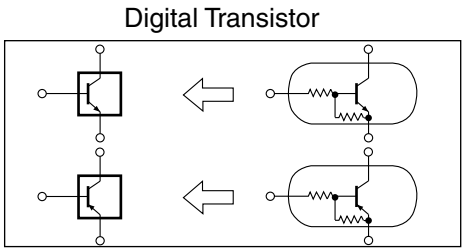

LIST OF CAUTION, NOTES, AND SYMBOLS USED IN THE SCHEMATIC DIAGRAMS ON THE FOLLOWING PAGES:

1. CAUTION:

FOR CONTINUED PROTECTION AGAINST FIRE HAZARD, REPLACE ONLY WITH THE SAME TYPE FUSE.

2. CAUTION:

Fixed Voltage (or Auto voltage selectable) power supply circuit is used in this unit.

If Main Fuse (F601) is blown, first check to see that all components in the power supply circuit are not defective before you connect the AC plug to the AC power supply. Otherwise it may cause some components in the power supply circuit to fail.

3. Note:

1. Do not use the part number shown on the drawings for ordering. The correct part number is shown in the parts list, and may be slightly different or amended since the drawings were prepared.
2. To maintain original function and reliability of repaired units, use only original replacement parts which are listed with their part numbers in the parts list section of the service manual.

4. Voltage indications on the schematics are as shown below:

Plug the TV power cord into a standard AC outlet.:

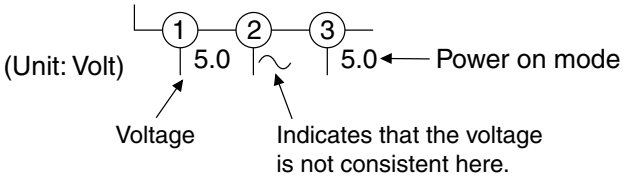

5. How to read converged lines

1-D3

Distinction Area

Line Number (1 to 3 digits)

Examples:

1. "1-D3" means that line number "1" goes to the line number "1" of the area "D3".
2. "1-B1" means that line number "1" goes to the line number "1" of the area "B1".

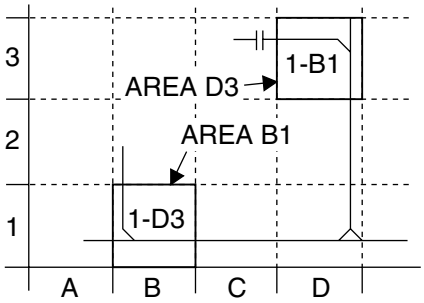

6. Test Point Information

: Indicates a test point with a jumper wire across a hole in the PCB.

: Used to indicate a test point with a component lead on foil side.

: Used to indicate a test point with no test pin.

: Used to indicate a test point with a test pin.

Main 1/4 Schematic Diagram

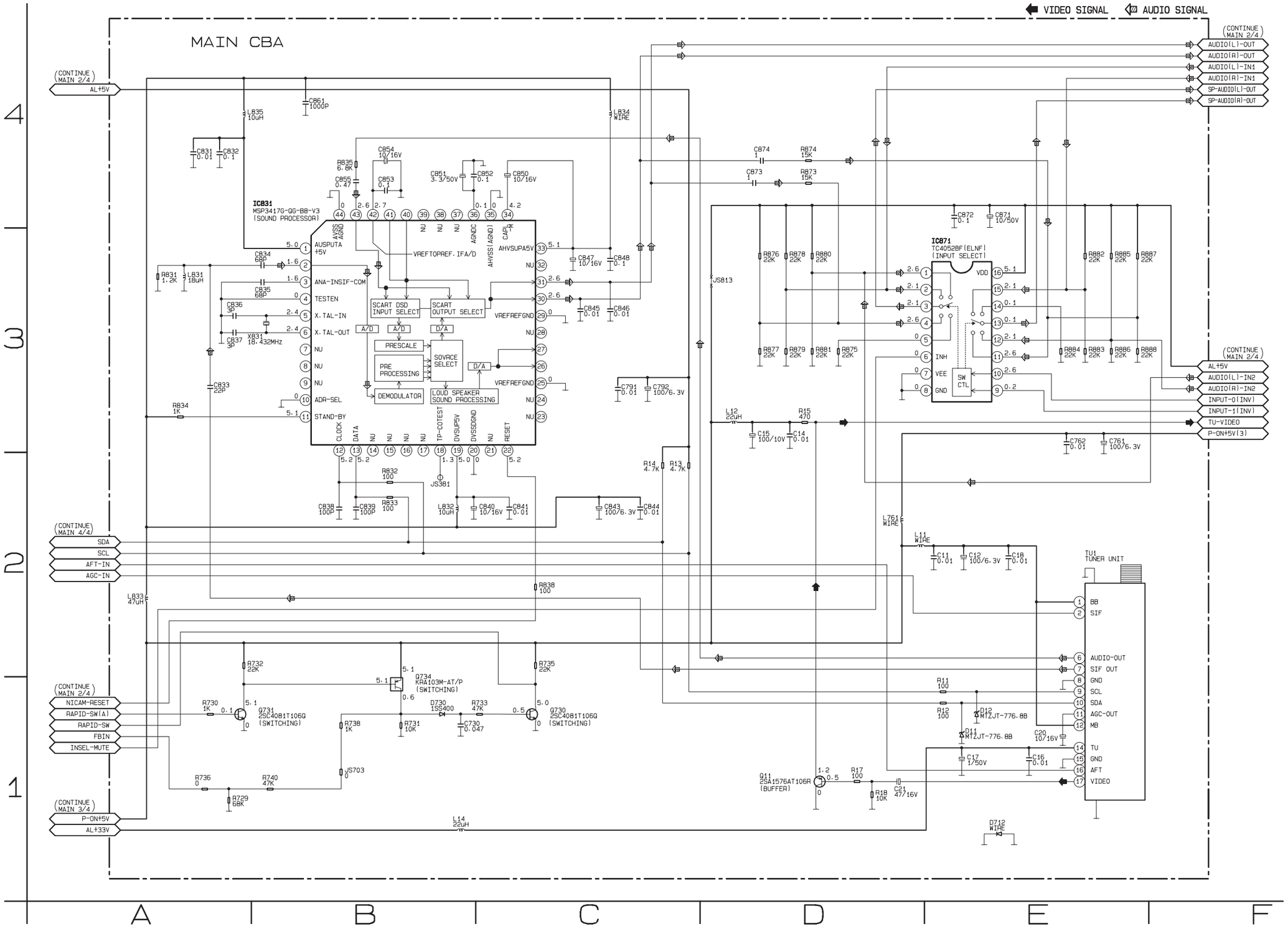

Main 2/4 Schematic Diagram

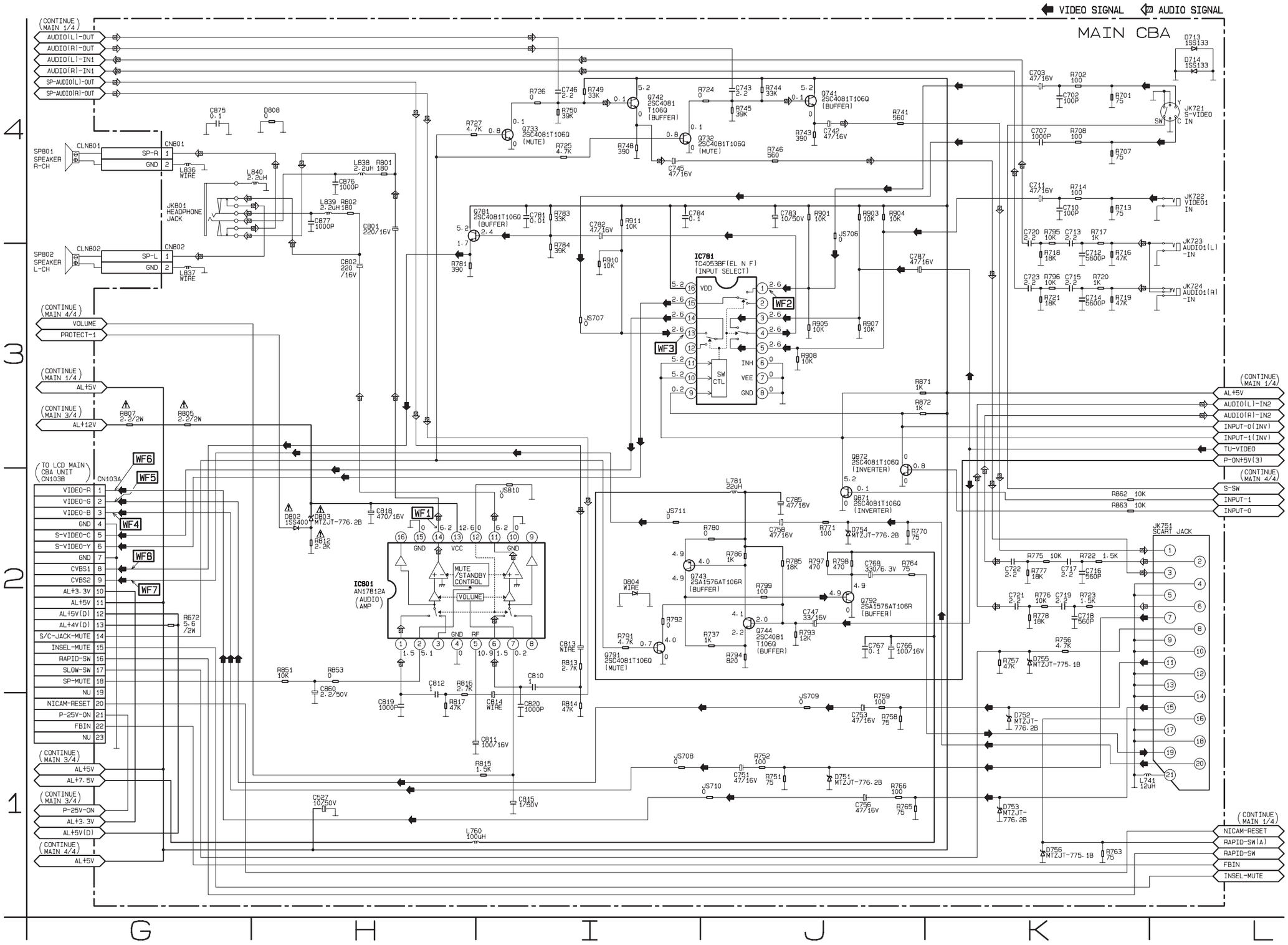

VOLTAGE CHART

CN103A

Pin No.	Voltage
1	0.1
2	0.4
3	0.2
4	0
5	2.6
6	2.6
7	0
8	1.7
9	0.2
10	0
11	3.5
12	5.2
13	6.9
14	3.1
15	0
16	4.8
17	0
18	5.2
19	0
20	5.2
21	3.3
22	3.1
23	0

Main 3/4 Schematic Diagram

CAUTION !
For continued protection against fire hazard, replace only with the same type fuse.

NOTE:
The voltage for parts in hot circuit is measured using hot GND as a common terminal.

CAUTION !
Fixed voltage (or Auto voltage selectable) power supply circuit is used in this unit. If Main Fuse (F601) is blown , check to see that all components in the power supply circuit are not defective before you connect the AC plug to the AC power supply. Otherwise it may cause some components in the power supply circuit to fail.

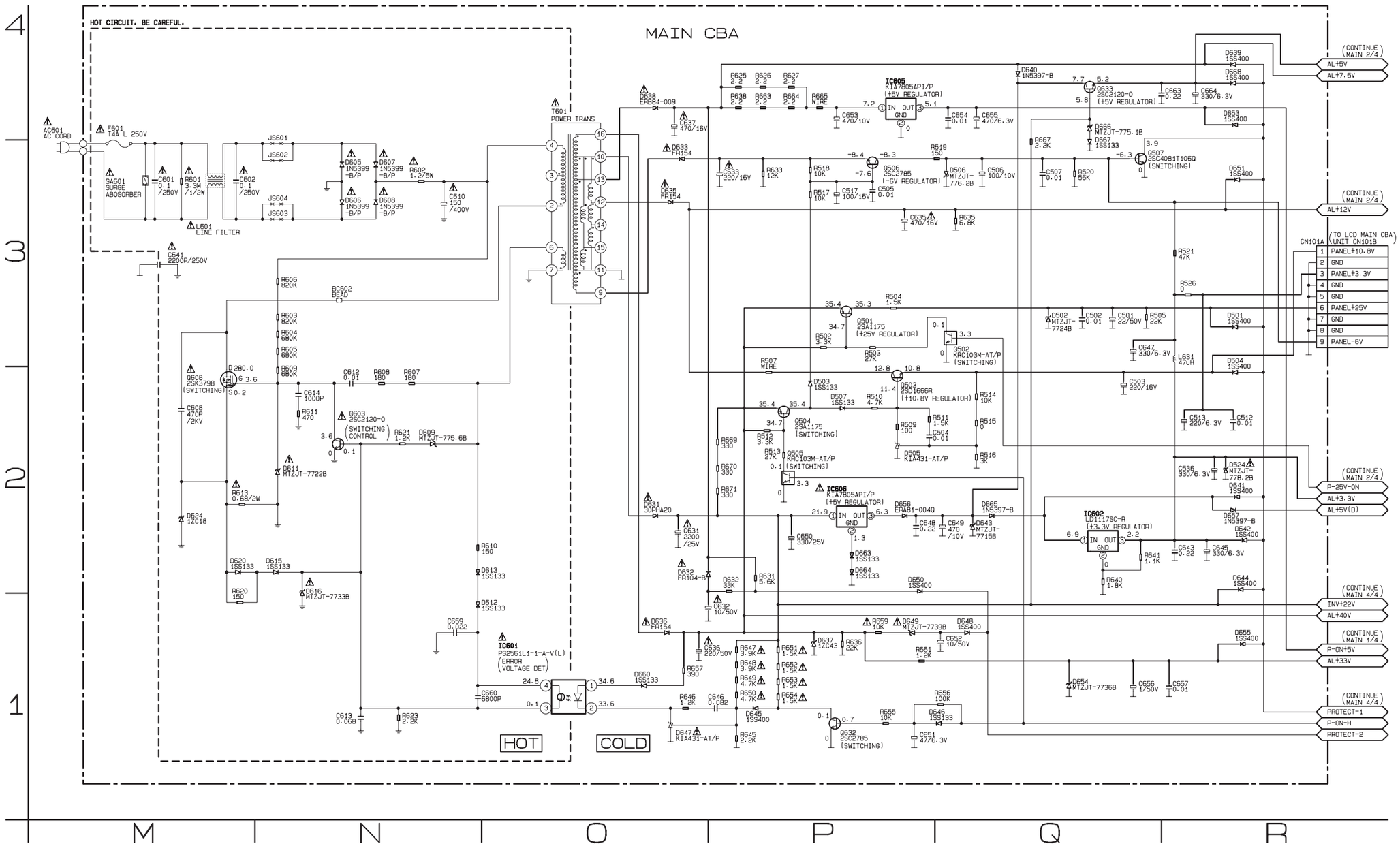

VOLTAGE CHART

CN101A

Pin No.	Voltage
1	10.8
2	0
3	3.4
4	0
5	0
6	25.9
7	0
8	0
9	-6.3

Main 4/4 & IR Sensor Schematic Diagram

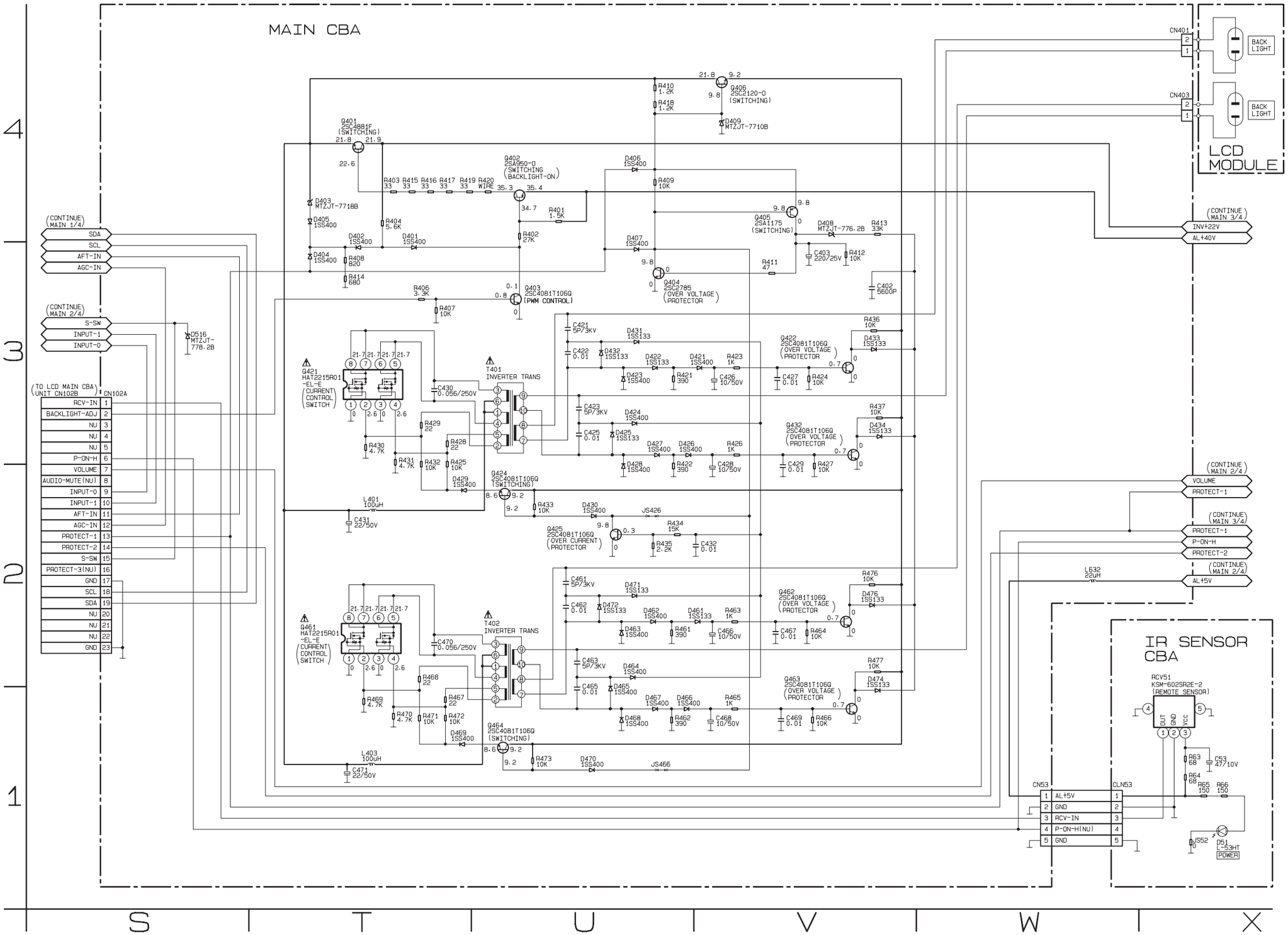

VOLTAGE CHART

CN102A

Pin No.	Voltage
1	3.8
2	0
3	0.1
4	5.2
5	5.2
6	3.3
7	0.2
8	0
9	2.0
10	0
11	4.4
12	0.4
13	3.8
14	1.5
15	3.4
16	0
17	0
18	5.2
19	5.2
20	0
21	0
22	0
23	0

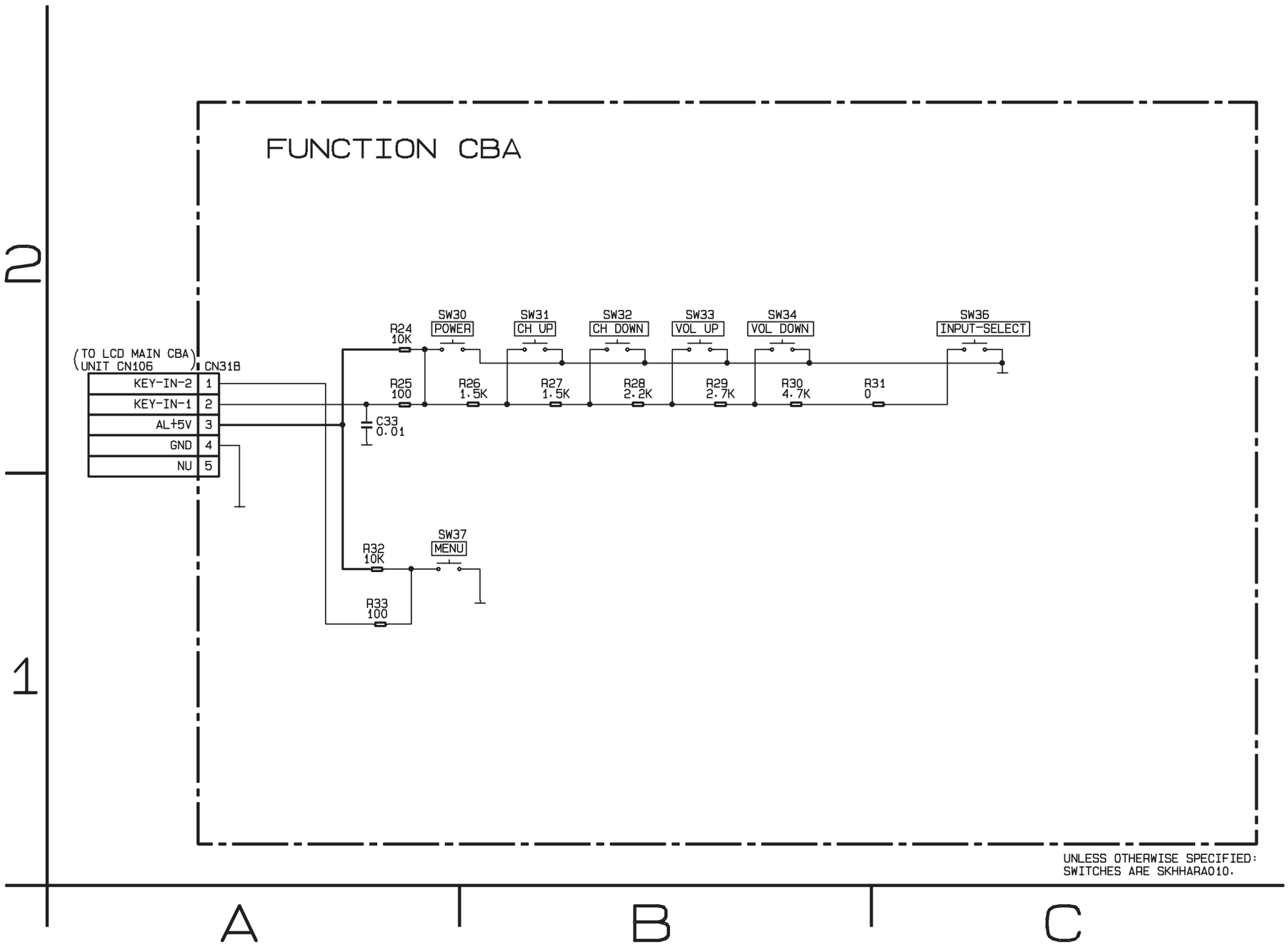
FUNCTION CBA
(TO LCD MAIN CBA UNIT CN106)
CN31B
KEY-IN-2 1
KEY-IN-1 2
AL+5V 3
GND 4
NU 5
R24 10K
R25 100
C33 0.01
R26 1.5K
R27 1.5K
R28 2.2K
R29 2.7K
R30 4.7K
R31 0
SW30 POWER
SW31 CH UP
SW32 CH DOWN
SW33 VOL UP
SW34 VOL DOWN
SW36 INPUT-SELECT
R32 10K
R33 100
SW37 MENU
UNLESS OTHERWISE SPECIFIED:
SWITCHES ARE SKHHARA010.
2
1
A
B
C

LCD Main 1/2 Schematic Diagram

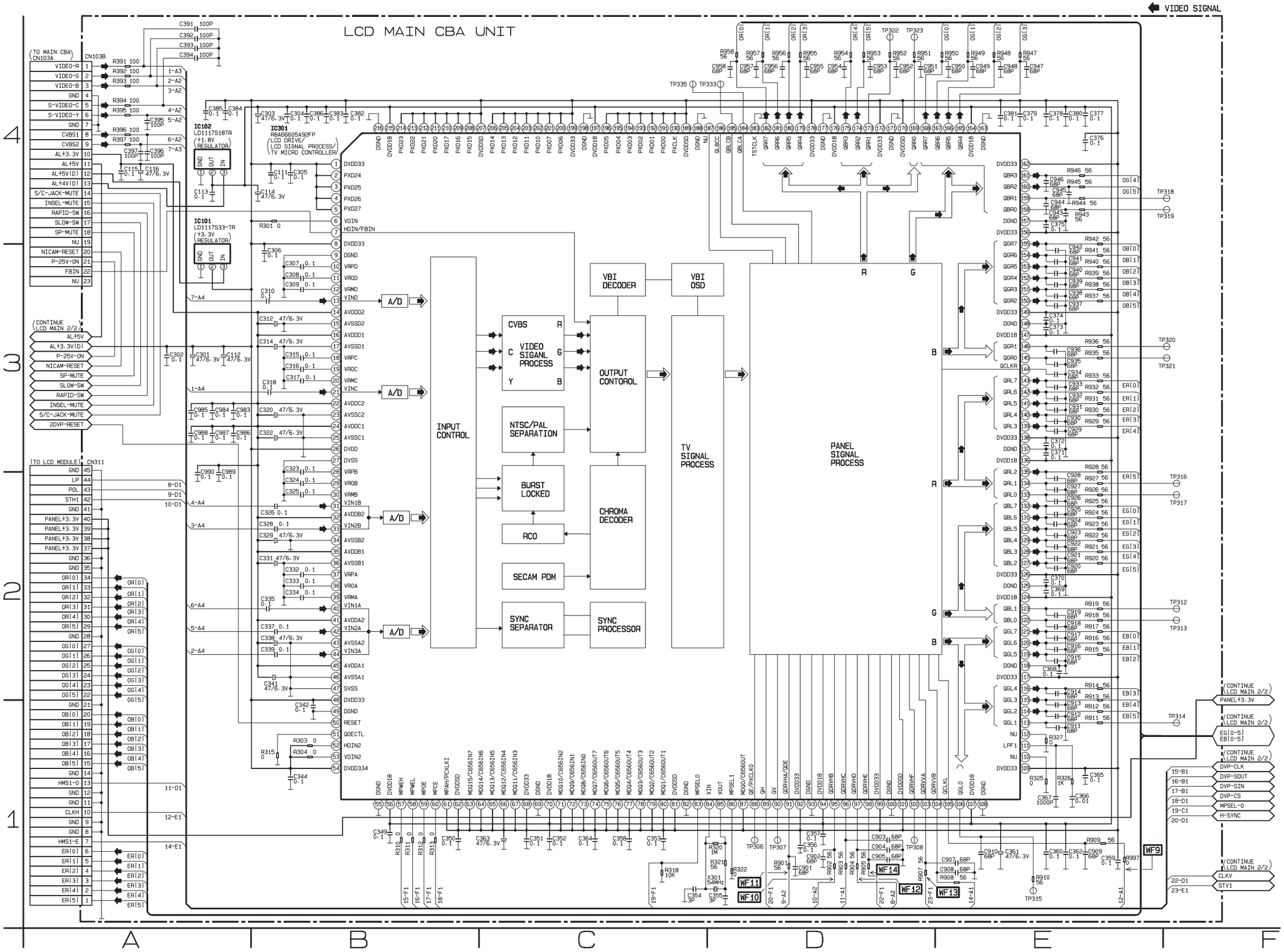

LCD Main 2/2 Schematic Diagram

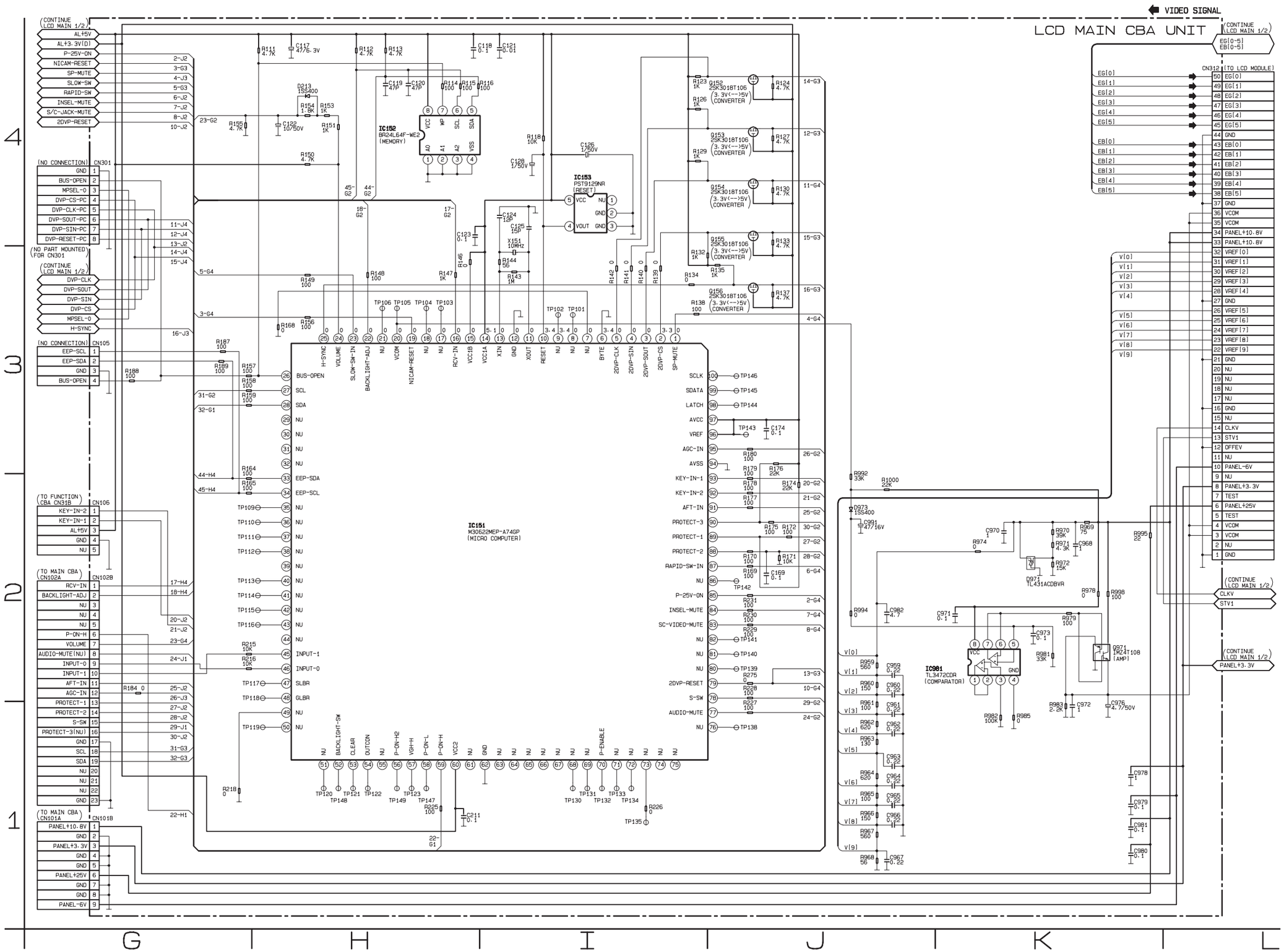

Main CBA Top View

CAUTION !
For continued protection against fire hazard, replace only with the same type fuse.

NOTE:
The voltage for parts in hot circuit is measured using hot GND as a common terminal.

CAUTION !
Fixed voltage (or Auto voltage selectable) power supply circuit is used in this unit. If Main Fuse (F601) is blown , check to see that all components in the power supply circuit are not defective before you connect the AC plug to the AC power supply. Otherwise it may cause some components in the power supply circuit to fail.

Because a hot chassis ground is present in the power supply circut, an isolation transformer must be used. Also, in order to have the ability to increase the input slowly, when troubleshooting this type power supply circuit, a variable isolation transformer is required.

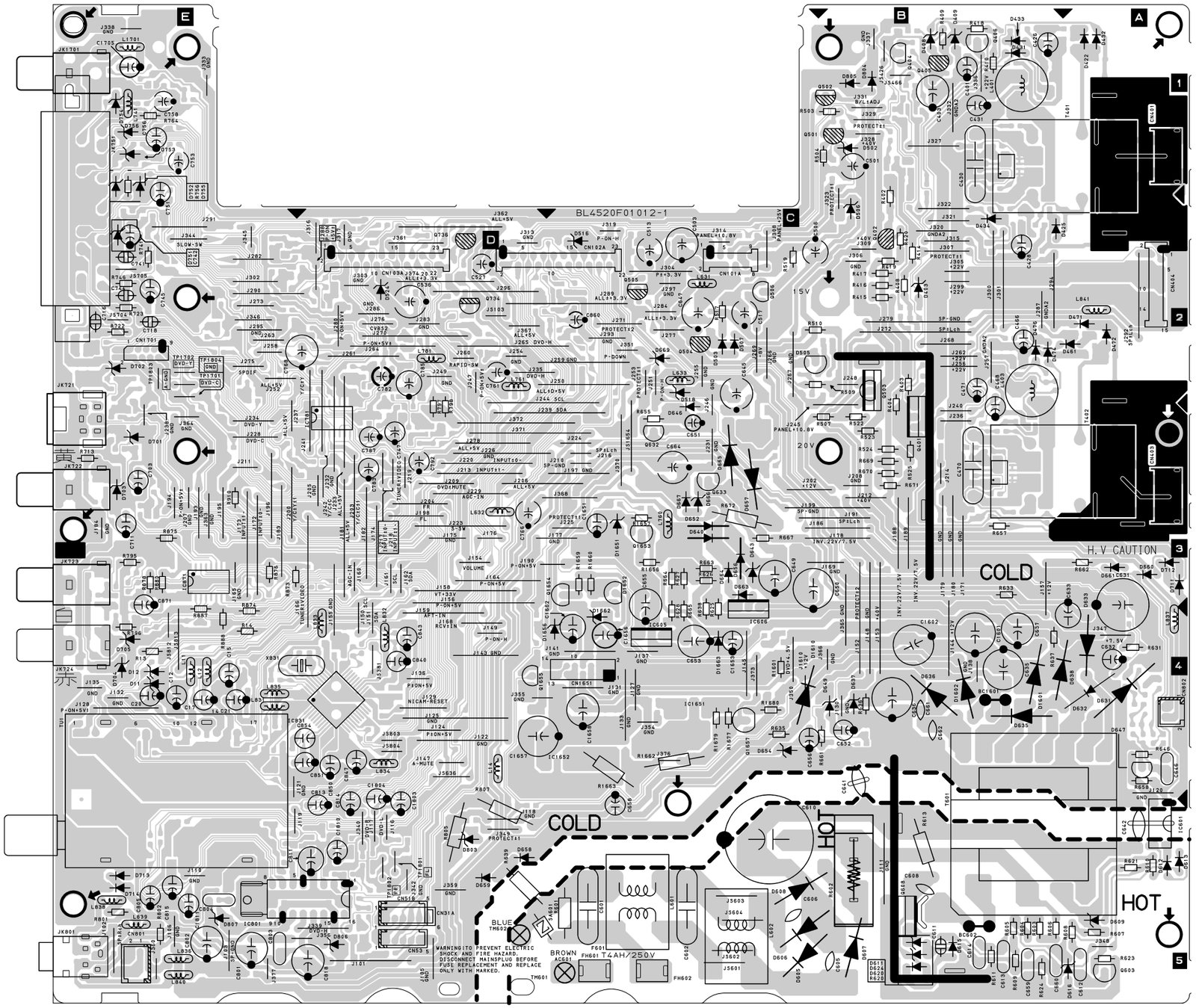

Main CBA Bottom View

CAUTION !
For continued protection against fire hazard, replace only with the same type fuse.

NOTE:
The voltage for parts in hot circuit is measured using hot GND as a common terminal.

CAUTION !
Fixed voltage (or Auto voltage selectable) power supply circuit is used in this unit. If Main Fuse (F601) is blown , check to see that all components in the power supply circuit are not defective before you connect the AC plug to the AC power supply. Otherwise it may cause some components in the power supply circuit to fail.

Because a hot chassis ground is present in the power supply circut, an isolation transformer must be used. Also, in order to have the ability to increase the input slowly, when troubleshooting this type power supply circuit, a variable isolation transformer is required.

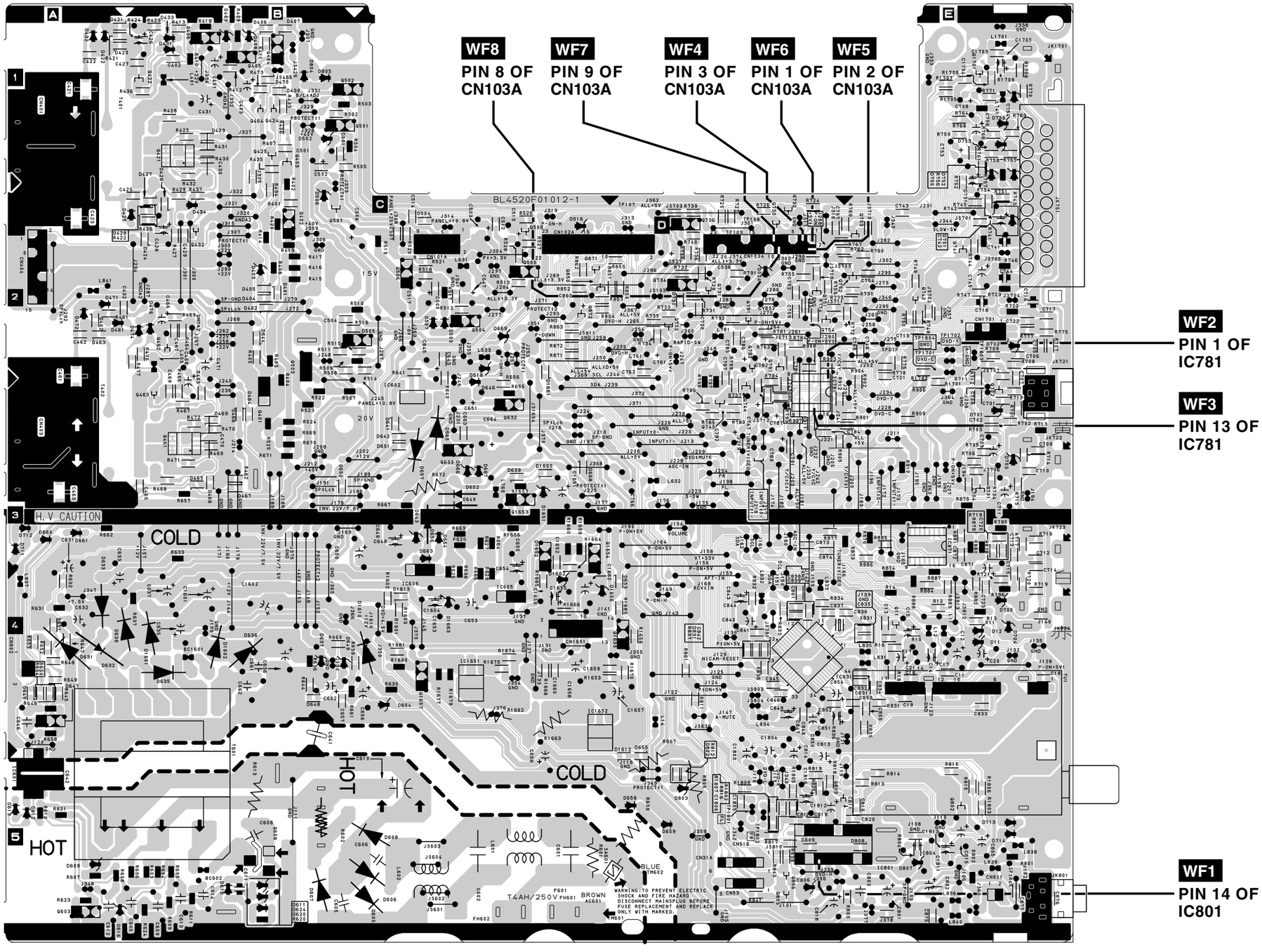

Function CBA Top View

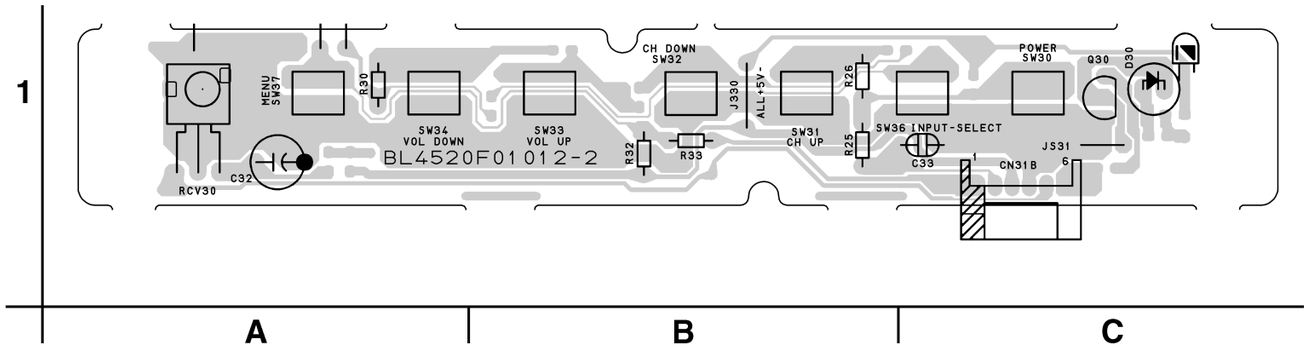

IR Sensor CBA Top & Bottom View

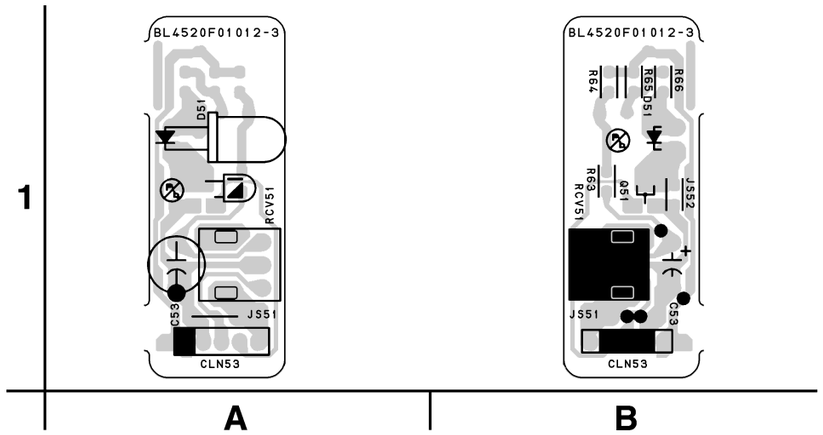

BL4520F01012-3

Function CBA Bottom View

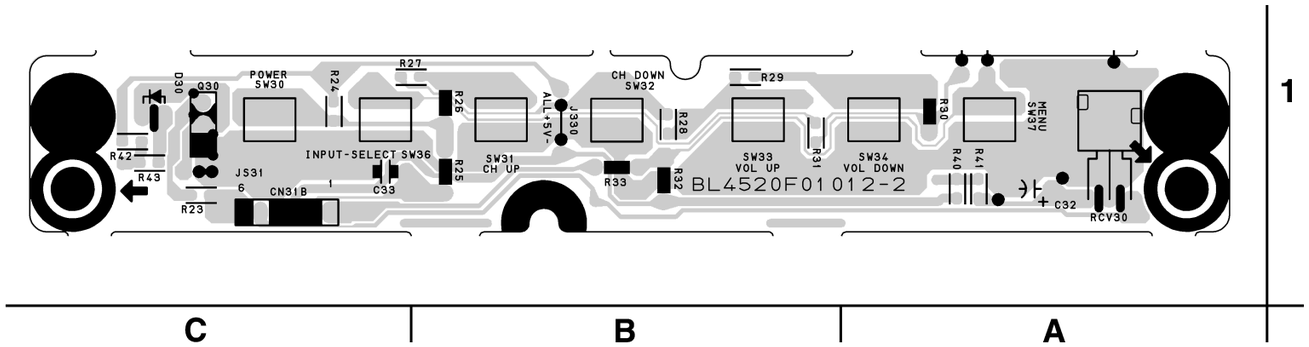

BL4520F01012-2

WAVEFORMS

WF1 ~ WF8 = Waveforms to be observed at Waveform check points. (Shown in Schematic Diagram.)

Input: PAL Color Bar Signal (with 1kHz Audio Signal)

WF1 Pin 14 of IC801

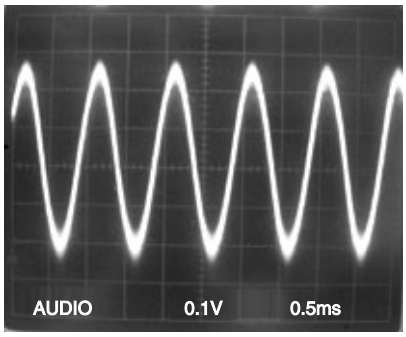

WF4 Pin 3 of CN103A

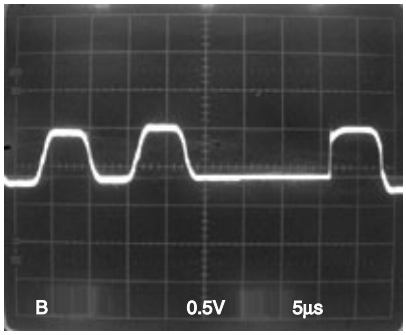

WF7 Pin 9 of CN103A

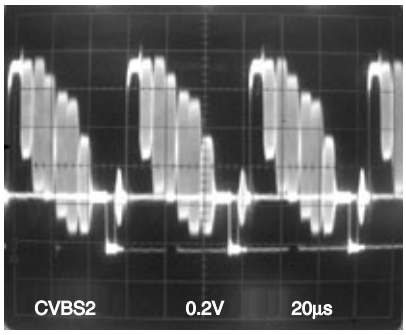

WF2 Pin 1 of IC781

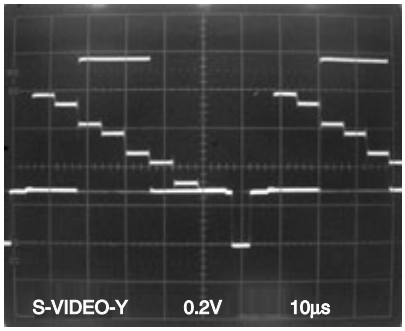

WF5 Pin 2 of CN103A

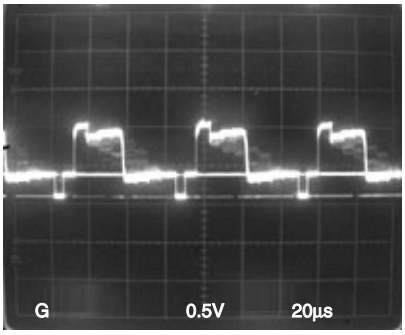

WF8 Pin 8 of CN103A

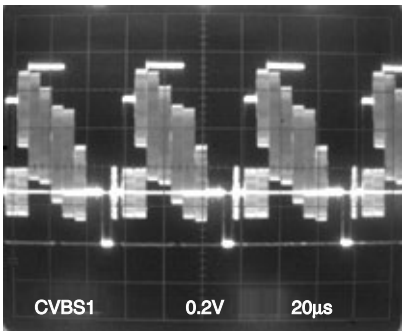

WF3 Pin 13 of IC781

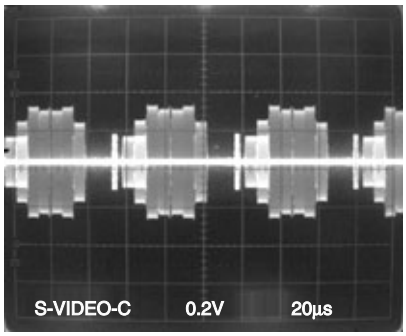

WF6 Pin 1 of CN103A

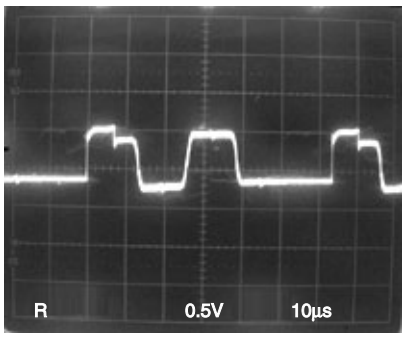

WF9 ~ WF14 = Waveforms to be observed at Waveform check points. (Shown in Schematic Diagram.)

Input: PAL Color Bar Signal (with 1kHz Audio Signal)

WF9 R997

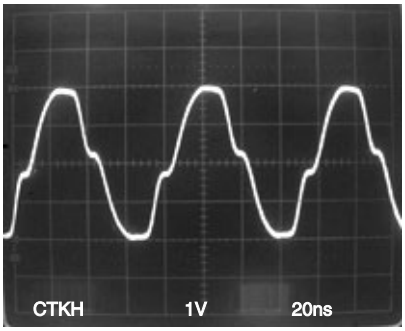

WF12 R904

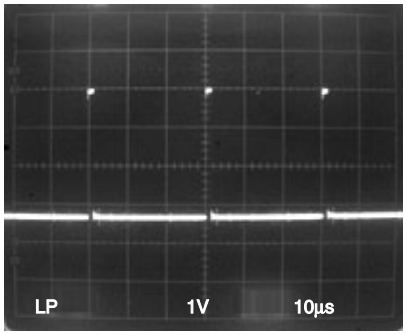

WF10 R902

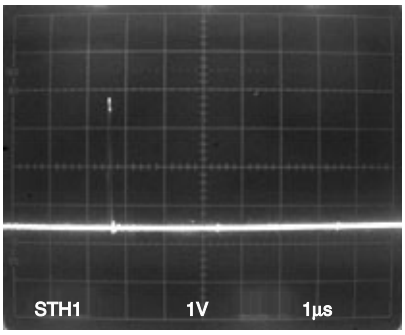

WF13 R907

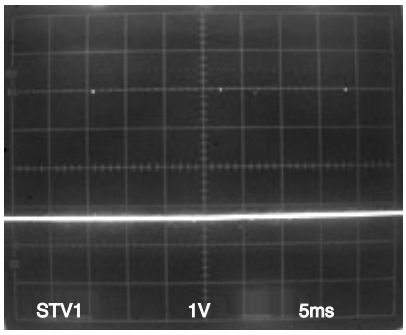

WF11 R901

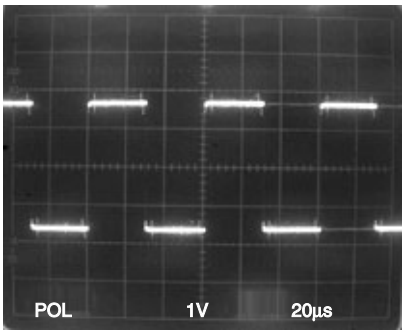

WF14 R905

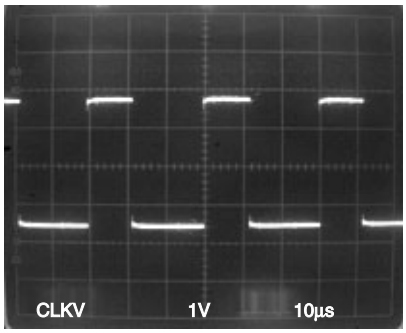

WIRING DIAGRAMS

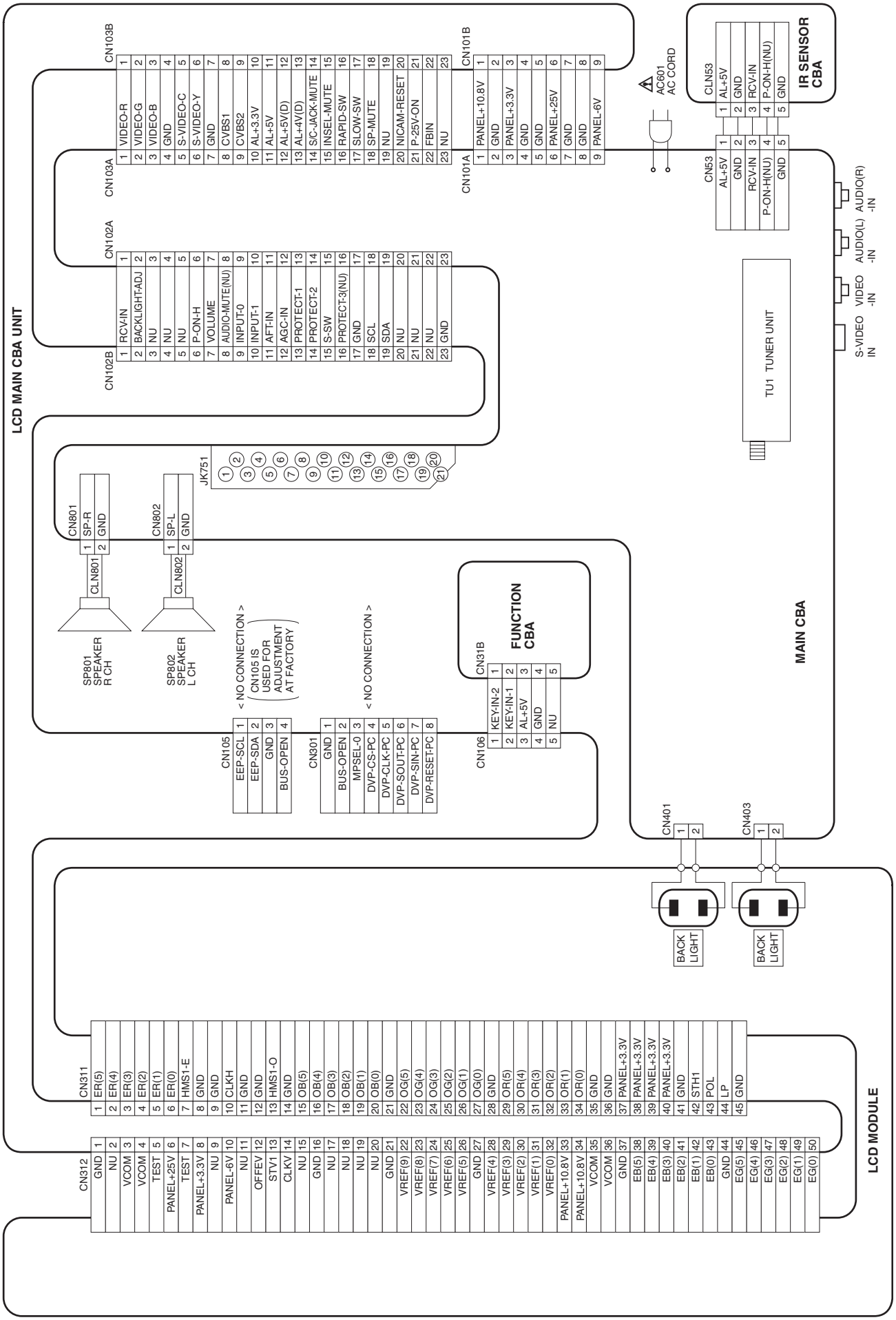

EXPLODED VIEWS

Cabinet

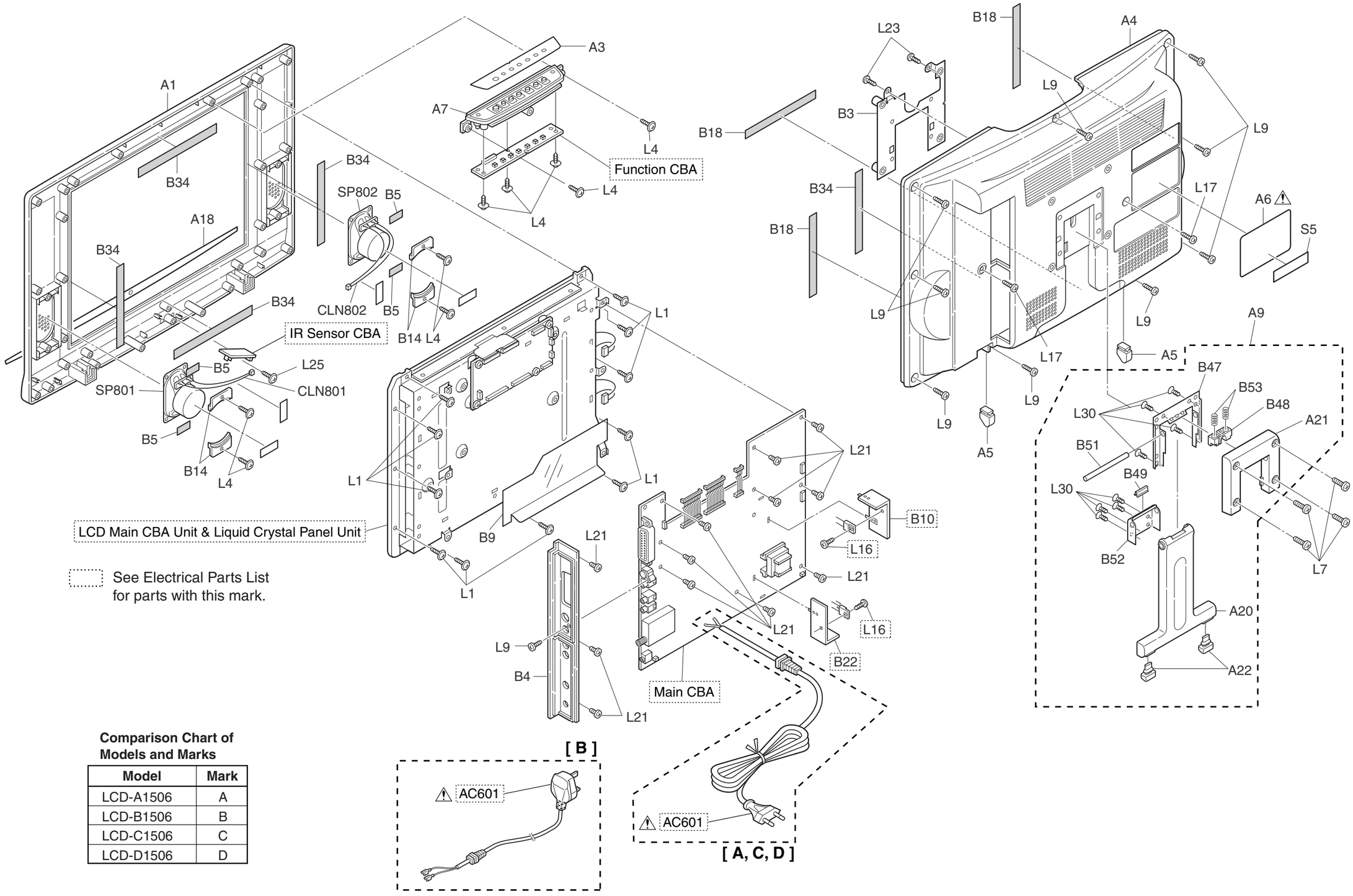

Comparison Chart of Models and Marks

Model	Mark
LCD-A1506	A
LCD-B1506	B
LCD-C1506	C
LCD-D1506	D

Packing

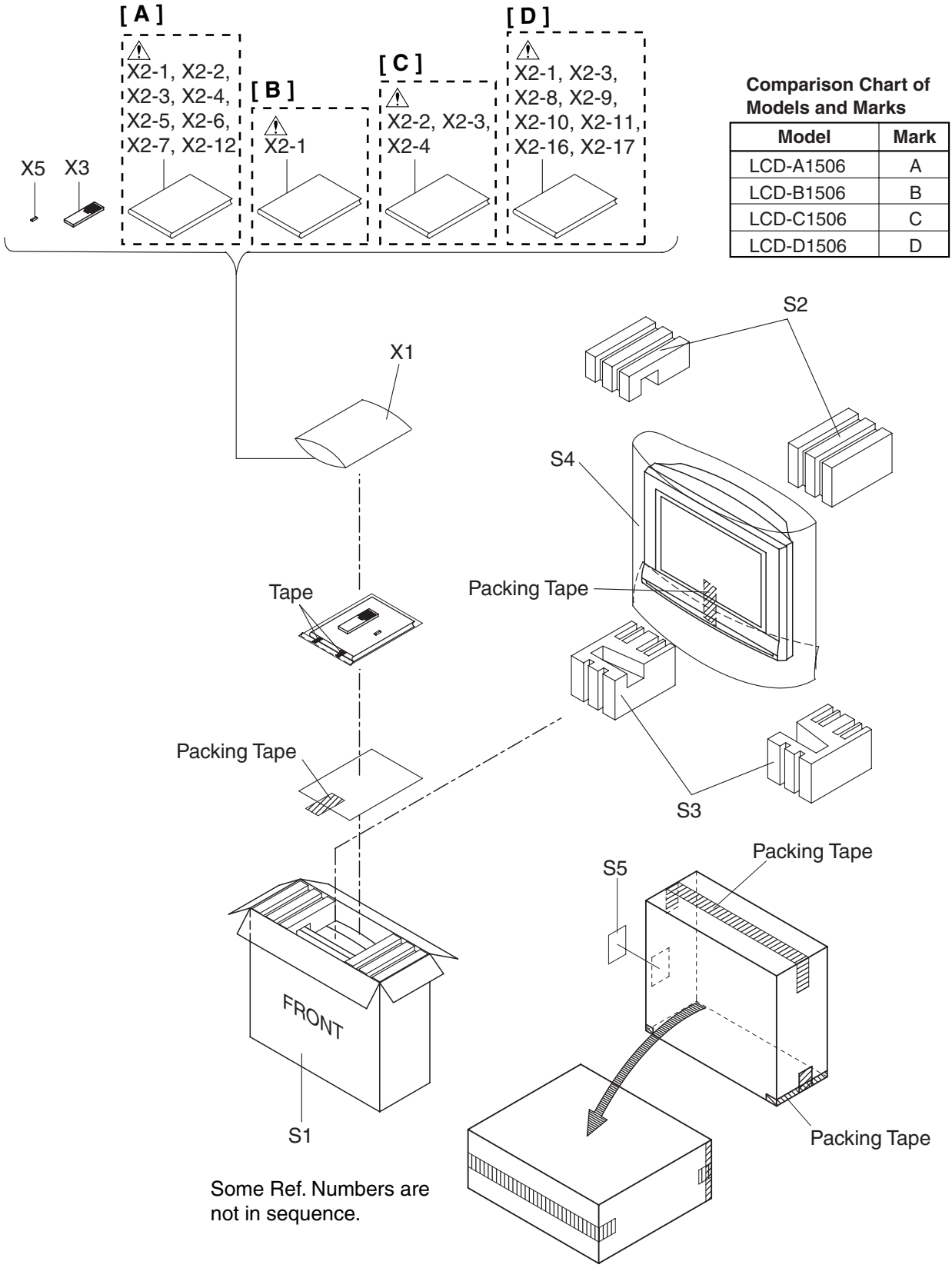

Comparison Chart of Models and Marks

Model	Mark
LCD-A1506	A
LCD-B1506	B
LCD-C1506	C
LCD-D1506	D

MECHANICAL PARTS LIST

PRODUCT SAFETY NOTE: Products marked with a ⚠ have special characteristics important to safety. Before replacing any of these components, read carefully the product safety notice in this service manual. Don't degrade the safety of the product through improper servicing.

NOTE: Parts that are not assigned part numbers (---------) are not available.

Comparison Chart of Models and Marks

Model	Mark
LCD-A1506	A
LCD-B1506	B
LCD-C1506	C
LCD-D1506	D

PARTS produced in CHINA

Ref. No.	Mark	Description	Part No.
A1		FRONT CABINET L4520EA	1EM121696
A3		CONTROL PLATE L4520EA	1EM322201
A4		REAR CABINET L4520EA	1EM021436
A5		RUUBBER FOOT L3201UB	1EM320183
A7		FUNCTION KNOB L4520EA	1EM322200
A9		PHOTO STAND ASSEMBLY L4520EA	1ESA13353
A18		FRONT PLATE L4520EA	1EM322199
A20		STAND B (15V) L4520EA	1EM121703
A21		STAND A L4520EA	1EM221419
A22		FOOT L4520EA	1EM423649
B3		STAND HOLDER L2500UA	1EM321428
B4		JACK HOLDER L4520EA	1EM121697
B5		CLOTH(10X30XT0.5) B5900UA	0EM404486
B9		INSULATION SHEET L4520EA	1EM423590
B14		SPEAKER HOLDER L4520EA	1EM423570
B18		CLOTH(10X190XT0.3) L0200UA	1EM420019
B34		CLOTH 10X150XT1.0	1EM421092
B47		BRACKET L4520EA	1EM322218
B48		LATCH L4520EA	1EM322221
B49		CLIP L4520EA	1EM423647
B51		SHAFT L4520EA	1EM423648
B52		HOLDER L4520EA	1EM423650
B53		LATCH SPRING L4520EA	1EM423652
CLN801		WIRE ASSEMBLY 2PIN 2PIN 300MM AWG26	WX1L4520-003
CLN802		WIRE ASSEMBLY 2PIN 2PIN 130MM AWG26	WX1L4520-004
L4		SCREW P-TIGHT M3*10 WASHERHEAD+	GCJP3100
L7		SCREW S-TIGHT M4X18 BIND HEAD+	GBHS4180
L9		SCREW P-TIGHT 3X10 BIND HEAD+	GBHP3100
L23		SCREW P-TIGHT M3X8 BIND HEAD+	GBJP3080
L25		ASSEMBLED SCREW M3X10	1EM420633A
L30		SCREW P-TIGHT M3X8 DISH HEAD+	GDJP3080
SP801		SPEAKER S0407F10	DSD0807XQ002
SP802		SPEAKER S0407F10	DSD0807XQ002
ACCESSORY			
X3		REMOTE CONTROL NF007RD 192/ ERC001/NF007RD	NF007RD

PARTS produced in EU

Ref. No.	Mark	Description	Part No.
A6⚠	A	RATING LABEL L4520EA	---------
A6⚠	B	RATING LABEL L4521BB	---------
A6⚠	C	RATING LABEL L4522FC	---------
A6⚠	D	RATING LABEL L4523RD	---------
L1		SCREW P-TIGHT 3X12 WASHER HEAD+	GCJP3120
L4		SCREW P-TIGHT M3*10 WASHERHEAD+	GCJP3100
L9		SCREW P-TIGHT 3X10 BIND HEAD+	GBHP3100
L17		SCREW S-TIGHT M3X8 BIND HEAD+	GBHS3080
L21		SCREW S-TIGHT M3X8 BIND HEAD+	GBJS3080
PACKING			
S1	A	CARTON L4520EA	1EM423566
S1	B	CARTON L4521BB	1EM423725
S1	C	CARTON L4522FC	1EM423728
S1	D	CARTON L4523RD	1EM423731
S2		STYROFOAM TOP L4520EA	1EM021471
S3		STYROFOAM BOTTOM L4520EA	1EM021472
S4		SET BAG L3100UA	1EM320214
S5	A	SERIAL NO. LABEL L4520EA	---------
S5	B	SERIAL NO. LABEL L4521BB	---------
S5	C	SERIAL NO. LABEL L4522FC	---------
S5	D	SERIAL NO. LABEL L4523RD	---------
ACCESSORIES			
X1		BAG POLYETHYLENE 235X365XT0.03	0EM408420A
X2-1⚠	A,B,D	OWNERS MANUAL(EN) L4520EA	1EMN21927
X2-2⚠	A,C	OWNERS MANUAL(FR) L4520EA	1EMN21928
X2-3⚠	A,C,D	OWNERS MANUAL(DE) L4520EA	1EMN21929
X2-4⚠	A,C	OWNERS MANUAL(IT) L4520EA	1EMN21930
X2-5⚠	A	OWNERS MANUAL(ES) L4520EA	1EMN21931
X2-6⚠	A	OWNERS MANUAL(NL) L4520EA	1EMN21932
X2-7⚠	A	OWNERS MANUAL(SV) L4520EA	1EMN21933
X2-8⚠	D	OWNERS MANUAL(RU) L4523RD	1EMN21936
X2-9⚠	D	OWNERS MANUAL(PL) L4523RD	1EMN21937
X2-10⚠	D	OWNERS MANUAL(HU) L4622FC	1EMN21938
X2-11⚠	D	OWNERS MANUAL(CS) L4523RD	1EMN21939
X2-12⚠	A	OWNERS MANUAL(EL) L4520EA	1EMN21934
X2-16⚠	D	OWNERS MANUAL(SK) L4523RD	1EMN21940
X2-17⚠	D	OWNERS MANUAL(AR) L4523RD	1EMN21942
X5		BATTERY R6RC/2P	XB0M601MS001

ELECTRICAL PARTS LIST

PRODUCT SAFETY NOTE: Products marked with a ⚠ have special characteristics important to safety. Before replacing any of these components, read carefully the product safety notice in this service manual. Don't degrade the safety of the product through improper servicing.

NOTES:

1. Parts that are not assigned part numbers (---------) are not available.
2. Tolerance of Capacitors and Resistors are noted with the following symbols.

C.....±0.25% D.....±0.5% F.....±1%

G.....±2% J.....±5% K.....±10%

M.....±20% N.....±30% Z.....+80/-20%

Comparison Chart of Models and Marks

Model	Mark
LCD-A1506	A
LCD-B1506	B
LCD-C1506	C
LCD-D1506	D

PARTS produced in CHINA

LCD MAIN CBA UNIT & LIQUID CRYSTAL PANEL UNIT

Ref. No.	Description	Part No.
	LCD MAIN CBA UNIT & LIQUID CRYSTAL PANEL UNIT	1FSA10145

MMA CBA

Ref. No.	Description	Part No.
	MMA CBA Consists of the following:	1ESA13359
	MAIN CBA FUNCTION CBA IR SENSOR CBA	--------- --------- ---------

MAIN CBA

Ref. No.	Description	Part No.
	MAIN CBA Consists of the following:	---------
	CAPACITORS	
C11	CHIP CERAMIC CAP.(1608) B K 0.01μF/50V	CHD1JK30B103
C12	ELECTROLYTIC CAP. 100μF/6.3V M or	CE0KMASDL101
	ELECTROLYTIC CAP. 100μF/6.3V M or	CA0K101SP085
	ELECTROLYTIC CAP. 100μF/6.3V M	CE0KMASTM101
C14	CHIP CERAMIC CAP.(1608) B K 0.01μF/50V	CHD1JK30B103
C15	ELECTROLYTIC CAP. 100μF/10V M or	CE1AMASDL101
	ELECTROLYTIC CAP. 100μF/10V M or	CA1A101SP085
	ELECTROLYTIC CAP. 100μF/10V M	CE1AMASTM101
C16	CHIP CERAMIC CAP.(1608) B K 0.01μF/50V	CHD1JK30B103
C17	ELECTROLYTIC CAP. 1μF/50V M or	CE1JMASDL1R0
	ELECTROLYTIC CAP 1μF/50V M or	CA1J1R0SP085
	ELECTROLYTIC CAP 1μF/50V M	CE1JMASTM1R0
C18	CHIP CERAMIC CAP.(1608) B K 0.01μF/50V	CHD1JK30B103
C20	ELECTROLYTIC CAP. 10μF/16V M or	CE1CMASDL100
	ELECTROLYTIC CAP. 10μF/16V M or	CA1C100SP085
	ELECTROLYTIC CAP. 10μF/16V M	CE1CMASTM100
C21	ELECTROLYTIC CAP. 47μF/16V M or	CE1CMASDL470
	ELECTROLYTIC CAP. 47μF/16V M or	CA1C470SP085
	ALUMINUM ELECTROLYTIC CAP 47μF/16V M	CE1CMASTM470
C402	CHIP CERAMIC CAP.(1608) B K 5600pF/50V	CHD1JK30B562
C403	ELECTROLYTIC CAP. 220μF/25V M or	CE1EMASDL221
	ELECTROLYTIC CAP. 220μF/25V M or	CA1E221SP085
	ELECTROLYTIC CAP. 220μF/25V M	CE1EMASTM221
C421	CAP CHIP 5pF 3KV C XC	CA3F5R05M016
C422	CHIP CERAMIC CAP.(1608) B K 0.01μF/50V	CHD1JK30B103
C423	CAP CHIP 5pF 3KV C XC	CA3F5R05M016
C425	CHIP CERAMIC CAP.(1608) B K 0.01μF/50V	CHD1JK30B103
C426	ELECTROLYTIC CAP. 10μF/50V M or	CE1JMASDL100
	ELECTROLYTIC CAP. 10μF/50V M or	CA1J100SP085
	ALUMINUM ELECTROLYTIC CAP 10μF/50V M	CE1JMASTM100
C427	CHIP CERAMIC CAP.(1608) B K 0.01μF/50V	CHD1JK30B103
C428	ELECTROLYTIC CAP. 10μF/50V M or	CE1JMASDL100
	ELECTROLYTIC CAP. 10μF/50V M or	CA1J100SP085
	ALUMINUM ELECTROLYTIC CAP 10μF/50V M	CE1JMASTM100
C429	CHIP CERAMIC CAP.(1608) B K 0.01μF/50V	CHD1JK30B103
C430	CAP METALIZED FILM 0.056μF 250V J ECWF2 or	CT2E563MS041
	CAP METALIZED FILM 0.056/250VDC/J/MPEF	CT2E563DT051
C431	ELECTROLYTIC CAP. 22μF/50V M or	CE1JMASDL220
	ELECTROLYTIC CAP. 22μF/50V M or	CA1J220SP085
	ELECTROLYTIC CAP 22μF/50V M	CE1JMASTM220
C432	CHIP CERAMIC CAP.(1608) B K 0.01μF/50V	CHD1JK30B103
C461	CAP CHIP 5pF 3KV C XC	CA3F5R05M016
C462	CHIP CERAMIC CAP.(1608) B K 0.01μF/50V	CHD1JK30B103
C463	CAP CHIP 5pF 3KV C XC	CA3F5R05M016
C465	CHIP CERAMIC CAP.(1608) B K 0.01μF/50V	CHD1JK30B103
C466	ELECTROLYTIC CAP. 10μF/50V M or	CE1JMASDL100
	ELECTROLYTIC CAP. 10μF/50V M or	CA1J100SP085
	ALUMINUM ELECTROLYTIC CAP 10μF/50V M	CE1JMASTM100
C467	CHIP CERAMIC CAP.(1608) B K 0.01μF/50V	CHD1JK30B103
C468	ELECTROLYTIC CAP. 10μF/50V M or	CE1JMASDL100
	ELECTROLYTIC CAP. 10μF/50V M or	CA1J100SP085
	ALUMINUM ELECTROLYTIC CAP 10μF/50V M	CE1JMASTM100
C469	CHIP CERAMIC CAP.(1608) B K 0.01μF/50V	CHD1JK30B103
C470	CAP METALIZED FILM 0.056μF 250V J ECWF2 or	CT2E563MS041
	CAP METALIZED FILM 0.056/250VDC/J/MPEF	CT2E563DT051
C471	ELECTROLYTIC CAP. 22μF/50V M or	CE1JMASDL220
	ELECTROLYTIC CAP. 22μF/50V M or	CA1J220SP085
	ELECTROLYTIC CAP 22μF/50V M	CE1JMASTM220
C501	ELECTROLYTIC CAP. 22μF/50V M H7 or	CE1JMAVSL220
	ALUMINUM ELECTROLYTIC CAP 22μF/50V H7	CE1JMAVSM220
C502	CHIP CERAMIC CAP.(1608) B K 0.01μF/50V	CHD1JK30B103
C503	ELECTROLYTIC CAP. 220μF/16V M H7 or	CE1CMASSL221
	ELECTROLYTIC CAP. 220μF/16V M H7	CE1CMASSM221
C504	CHIP CERAMIC CAP.(1608) B K 0.01μF/50V	CHD1JK30B103
C505	CHIP CERAMIC CAP.(1608) B K 0.01μF/50V	CHD1JK30B103
C506	ELECTROLYTIC CAP. 100μF/10V M H7 or	CE1AMAVSL101
	ALUMINUM ELECTROLYTIC CAP 100μF/10V H7	CE1AMAVSM101
C507	CHIP CERAMIC CAP.(1608) B K 0.01μF/50V	CHD1JK30B103
C512	CHIP CERAMIC CAP.(1608) B K 0.01μF/50V	CHD1JK30B103
C513	ELECTROLYTIC CAP. 220μF/6.3V M H7 or	CE0KMAVSL221
	ALUMINUM ELECTROLYTIC CAP 220μF/6.3V H7	CE0KMAVSM221
C517	ELECTROLYTIC CAP. 100μF/16V M H7 or	CE1CMAVSL101
	ALUMINUM ELECTROLYTIC CAP 100μF/16V H7	CE1CMAVSM101
C527	ELECTROLYTIC CAP. 10μF/50V M H7 or	CE1JMAVSL100

Ref. No.	Description	Part No.
	ALUMINUM ELECTROLYTIC CAP 10μF/50V H7	CE1JMAVSM100
C536	ELECTROLYTIC CAP. 330μF/6.3V M H7 or	CE0KMAVSL331
	ALUMINUM ELECTROLYTIC CAP 330μF/6.3V H7	CE0KMAVSM331
C601⚠	METALIZED FILM CAP. 0.1μF/250V or	CT2E104MS037
⚠	ACROSS THE LINE CAP. 0.1μF/250V K or	CT2E104DC011
⚠	ACROSS THE LINE CAP. 0.1U/250V	CT2E104DC015
C602⚠	METALIZED FILM CAP. 0.1μF/250V or	CT2E104MS037
⚠	ACROSS THE LINE CAP. 0.1μF/250V K or	CT2E104DC011
⚠	ACROSS THE LINE CAP. 0.1U/250V	CT2E104DC015
C608	CERAMIC CAP. BN 470pF/2KV or	CCD3DKA0B471
	CERAMIC CAP. 470pF/2KV or	CA3D471PAN04
	CERAMIC CAP. RB 470pF/2KV or	CA3D471TE006
	CERAMIC CAP. BL 470pF/2KV	CA3D471XF003
C610⚠	CAP ELE LQ SERIES 150μF/400V/M/85	CA2H151NC234
C612	FILM CAP.(P) 0.01μF/50V J or	CMA1JJS00103
	FILM CAP.(P) 0.01μF/50V J or	CA1J103MS029
	POLYESTER FILM CAP. (PB FREE) 0.01μF/100V J	CA2A103DT018
C613	FILM CAP.(P) 0.068μF/50V J or	CMA1JJS00683
	FILM CAP.(P) 0.068μF/50V J or	CA1J683MS029
	POLYESTER FILM CAP. (PB FREE) 0.068μF/100V J	CA2A683DT018
C614	FILM CAP.(P) 0.001μF/50V J or	CMA1JJS00102
	FILM CAP.(P) 0.001μF/50V J or	CA1J102MS029
	POLYESTER FILM CAP. (PB FREE) 0.001μF/100V J	CA2A102DT018
C631⚠	ELECTROLYTIC CAP. 2200μF/25V M or	CE1EMZPDL222
⚠	ALUMINUM ELECTROLYTIC CAP 2200μF/25V M or	CE1EMZNTM222
⚠	ELECTROLYTIC CAP. 2200μF/25V M	CE1EMZNDL222
C632⚠	ELECTROLYTIC CAP. 10μF/50V M or	CE1JMASDL100
⚠	ELECTROLYTIC CAP. 10μF/50V M or	CA1J100SP085
⚠	ALUMINUM ELECTROLYTIC CAP 10μF/50V M	CE1JMASTM100
C633⚠	ELECTROLYTIC CAP. 220μF/16V M or	CE1CMASDL221
⚠	ELECTROLYTIC CAP. 220μF/16V M or	CA1C221SP085
⚠	ELECTROLYTIC CAP. 220μF/16V M	CE1CMASTM221
C635⚠	ELECTROLYTIC CAP. 470μF/16V M or	CE1CMASDL471
⚠	ELECTROLYTIC CAP. 470μF/16V M or	CA1C471SP085
⚠	ELECTROLYTIC CAP. 470μF/16V M	CE1CMASTM471
C636⚠	ELECTROLYTIC CAP. 220μF/50V M or	CE1JMASDL221
⚠	ELECTROLYTIC CAP. 220μF/50V M or	CA1J221SP085
⚠	ELECTROLYTIC CAP 220μF/50V M	CE1JMASTM221
C637⚠	ELECTROLYTIC CAP. 470μF/16V M or	CE1CMASDL471
⚠	ELECTROLYTIC CAP. 470μF/16V M or	CA1C471SP085
⚠	ELECTROLYTIC CAP. 470μF/16V M	CE1CMASTM471
C641⚠	SAFETY CAP. 2200pF/250V KX	CA2E222MR050
C643	CHIP CERAMIC CAP.(1608) B K 0.22μF/25V	CHD1EK30B224
C645	ELECTROLYTIC CAP. 330μF/6.3V M H7 or	CE0KMAVSL331
	ALUMINUM ELECTROLYTIC CAP 330μF/6.3V H7	CE0KMAVSM331
C646	FILM CAP.(P) 0.082μF/50V J or	CMA1JJS00823
	FILM CAP.(P) 0.082μF/50V J or	CA1J823MS029
	POLYESTER FILM CAP. (PB FREE) 0.082μF/100V J	CA2A823DT018
C647	ELECTROLYTIC CAP. 330μF/6.3V M H7 or	CE0KMAVSL331
	ALUMINUM ELECTROLYTIC CAP 330μF/6.3V H7	CE0KMAVSM331
C648	CHIP CERAMIC CAP.(1608) B K 0.22μF/25V	CHD1EK30B224
C649	ELECTROLYTIC CAP. 470μF/10V M or	CE1AMASDL471
	ELECTROLYTIC CAP. 470μF/10V M or	CA1A471SP085
	ELECTROLYTIC CAP. 470μF/10V M	CE1AMASTM471
C650	ELECTROLYTIC CAP. 330μF/25V M or	CE1EMASDL331
	ELECTROLYTIC CAP. 330μF/25V M or	CA1E331SP085
	ALUMINUM ELECTROLYTIC CAP 330μF/25V M	CE1EMASTM331
C651	ELECTROLYTIC CAP. 47μF/6.3V M H7 or	CE0KMAVSL470
	ALUMINUM ELECTROLYTIC CAP 47μF/6.3V H7	CE0KMAVSM470
C652	ELECTROLYTIC CAP. 10μF/50V M H7 or	CE1JMAVSL100
	ALUMINUM ELECTROLYTIC CAP 10μF/50V H7	CE1JMAVSM100

Ref. No.	Description	Part No.
C653	ELECTROLYTIC CAP. 470μF/10V M or	CE1AMASDL471
	ELECTROLYTIC CAP. 470μF/10V M or	CA1A471SP085
	ELECTROLYTIC CAP. 470μF/10V M	CE1AMASTM471
C654	CHIP CERAMIC CAP.(1608) B K 0.01μF/50V	CHD1JK30B103
C655	ELECTROLYTIC CAP. 470μF/6.3V M or	CE0KMASDL471
	ELECTROLYTIC CAP. 470μF/6.3V M or	CA0K471SP085
	ELECTROLYTIC CAP. 470μF/6.3V M	CE0KMASTM471
C656	ELECTROLYTIC CAP. 1μF/50V M or	CE1JMASDL1R0
	ELECTROLYTIC CAP 1μF/50V M or	CA1J1R0SP085
	ELECTROLYTIC CAP 1μF/50V M	CE1JMASTM1R0
C657	CHIP CERAMIC CAP.(1608) B K 0.01μF/50V	CHD1JK30B103
C659	FILM CAP.(P) 0.022μF/50V J or	CMA1JJS00223
	FILM CAP.(P) 0.022μF/50V J or	CA1J223MS029
	POLYESTER FILM CAP. (PB FREE) 0.022μF/100V J	CA2A223DT018
C660	FILM CAP.(P) 0.0068μF/50V J or	CMA1JJS00682
	FILM CAP.(P) 0.0068μF/50V J or	CA1J682MS029
	POLYESTER FILM CAP. (PB FREE) 0.0068μF/100V J	CA2A682DT018
C663	CHIP CERAMIC CAP.(1608) B K 0.22μF/25V	CHD1EK30B224
C664	ELECTROLYTIC CAP. 330μF/6.3V M H7 or	CE0KMAVSL331
	ALUMINUM ELECTROLYTIC CAP 330μF/6.3V H7	CE0KMAVSM331
C702	CHIP CERAMIC CAP.(1608) CH J 100pF/50V	CHD1JJ3CH101
C703	ELECTROLYTIC CAP. 47μF/16V M or	CE1CMASDL470
	ELECTROLYTIC CAP. 47μF/16V M or	CA1C470SP085
	ALUMINUM ELECTROLYTIC CAP 47μF/16V M	CE1CMASTM470
C707	CHIP CERAMIC CAP.(1608) CH J 1000pF/50V	CHD1JJ3CH102
C710	CHIP CERAMIC CAP.(1608) CH J 100pF/50V	CHD1JJ3CH101
C711	ELECTROLYTIC CAP. 47μF/16V M or	CE1CMASDL470
	ELECTROLYTIC CAP. 47μF/16V M or	CA1C470SP085
	ALUMINUM ELECTROLYTIC CAP 47μF/16V M	CE1CMASTM470
C712	CHIP CERAMIC CAP.(1608) B K 5600pF/50V	CHD1JK30B562
C713	CHIP CERAMIC CAP. F Z 2.2μF/10V	CHD1AZ30F225
C714	CHIP CERAMIC CAP.(1608) B K 5600pF/50V	CHD1JK30B562
C715	CHIP CERAMIC CAP. F Z 2.2μF/10V	CHD1AZ30F225
C716	CERAMIC CAP.(AX) CH J 560pF/50V	CCK1JJTCH561
C717	CHIP CERAMIC CAP. F Z 2.2μF/10V	CHD1AZ30F225
C718	CERAMIC CAP.(AX) CH J 560pF/50V	CCK1JJTCH561
C719	CHIP CERAMIC CAP. F Z 2.2μF/10V	CHD1AZ30F225
C720	CHIP CERAMIC CAP. F Z 2.2μF/10V	CHD1AZ30F225
C721	CHIP CERAMIC CAP. F Z 2.2μF/10V	CHD1AZ30F225
C722	CHIP CERAMIC CAP. F Z 2.2μF/10V	CHD1AZ30F225
C723	CHIP CERAMIC CAP. F Z 2.2μF/10V	CHD1AZ30F225
C730	CHIP CERAMIC CAP.(1608) B K 0.047μF/50V	CHD1JK30B473
C742	ELECTROLYTIC CAP. 47μF/16V M or	CE1CMASDL470
	ELECTROLYTIC CAP. 47μF/16V M or	CA1C470SP085
	ALUMINUM ELECTROLYTIC CAP 47μF/16V M	CE1CMASTM470
C743	CHIP CERAMIC CAP. F Z 2.2μF/10V	CHD1AZ30F225
C745	ELECTROLYTIC CAP. 47μF/16V M or	CE1CMASDL470
	ELECTROLYTIC CAP. 47μF/16V M or	CA1C470SP085
	ALUMINUM ELECTROLYTIC CAP 47μF/16V M	CE1CMASTM470
C746	CHIP CERAMIC CAP. F Z 2.2μF/10V	CHD1AZ30F225
C747	ELECTROLYTIC CAP. 33μF/16V M H7 or	CE1CMAVSL330
	ALUMINUM ELECTROLYTIC CAP 33μF/16V H7	CE1CMAVSM330
C751	ELECTROLYTIC CAP. 47μF/16V M or	CE1CMASDL470
	ELECTROLYTIC CAP. 47μF/16V M or	CA1C470SP085
	ALUMINUM ELECTROLYTIC CAP 47μF/16V M	CE1CMASTM470
C753	ELECTROLYTIC CAP. 47μF/16V M H7 or	CE1CMAVSL470
	ALUMINUM ELECTROLYTIC CAP 47μF/16V H7	CE1CMAVSM470
C756	ELECTROLYTIC CAP. 47μF/16V M or	CE1CMASDL470
	ELECTROLYTIC CAP. 47μF/16V M or	CA1C470SP085
	ALUMINUM ELECTROLYTIC CAP 47μF/16V M	CE1CMASTM470
C758	ELECTROLYTIC CAP. 47μF/16V M H7 or	CE1CMAVSL470
	ALUMINUM ELECTROLYTIC CAP 47μF/16V H7	CE1CMAVSM470
C761	ELECTROLYTIC CAP. 100μF/6.3V H7 or	CE0KMAVSL101
	ALUMINUM ELECTROLYTIC CAP 100μF/6.3V H7	CE0KMAVSM101
C762	CHIP CERAMIC CAP.(1608) B K 0.01μF/50V	CHD1JK30B103

Ref. No.	Description	Part No.
C766	ELECTROLYTIC CAP. 100μF/16V M H7 or	CE1CMAVSL101
	ALUMINUM ELECTROLYTIC CAP 100μF/16V H7	CE1CMAVSM101
C767	CHIP CERAMIC CAP.(1608) B K 0.1μF/50V	CHD1JK30B104
C768	ELECTROLYTIC CAP. 330μF/6.3V M H7 or	CE0KMAVSL331
	ALUMINUM ELECTROLYTIC CAP 330μF/6.3V H7	CE0KMAVSM331
C781	CHIP CERAMIC CAP.(1608) B K 0.01μF/50V	CHD1JK30B103
C782	ELECTROLYTIC CAP. 47μF/16V M H7 or	CE1CMAVSL470
	ALUMINUM ELECTROLYTIC CAP 47μF/16V H7	CE1CMAVSM470
C783	ELECTROLYTIC CAP. 10μF/50V M H7 or	CE1JMAVSL100
	ALUMINUM ELECTROLYTIC CAP 10μF/50V H7	CE1JMAVSM100
C784	CHIP CERAMIC CAP.(1608) B K 0.1μF/50V	CHD1JK30B104
C785	ELECTROLYTIC CAP. 47μF/16V M H7 or	CE1CMAVSL470
	ALUMINUM ELECTROLYTIC CAP 47μF/16V H7	CE1CMAVSM470
C787	ELECTROLYTIC CAP. 47μF/16V M H7 or	CE1CMAVSL470
	ALUMINUM ELECTROLYTIC CAP 47μF/16V H7	CE1CMAVSM470
C791	CHIP CERAMIC CAP.(1608) B K 0.01μF/50V	CHD1JK30B103
C792	ELECTROLYTIC CAP. 100μF/6.3V H7 or	CE0KMAVSL101
	ALUMINUM ELECTROLYTIC CAP 100μF/6.3V H7	CE0KMAVSM101
C801	ELECTROLYTIC CAP. 220μF/16V M or	CE1CMASDL221
	ELECTROLYTIC CAP. 220μF/16V M or	CA1C221SP085
	ELECTROLYTIC CAP. 220μF/16V M	CE1CMASTM221
C802	ELECTROLYTIC CAP. 220μF/16V M or	CE1CMASDL221
	ELECTROLYTIC CAP. 220μF/16V M or	CA1C221SP085
	ELECTROLYTIC CAP. 220μF/16V M	CE1CMASTM221
C810	CHIP CERAMIC CAP. F Z 1μF/10V	CHD1AZ30F105
C811	ELECTROLYTIC CAP. 100μF/16V M or	CE1CMASDL101
	ELECTROLYTIC CAP. 100μF/16V M or	CA1C101SP085
	ELECTROLYTIC CAP. 100μF/16V M	CE1CMASTM101
C812	CHIP CERAMIC CAP. F Z 1μF/10V	CHD1AZ30F105
C813	PCB JUMPER D0.6-P5.0	JW5.0T
C814	PCB JUMPER D0.6-P5.0	JW5.0T
C815	ELECTROLYTIC CAP. 1μF/50V M or	CE1JMASDL1R0
	ELECTROLYTIC CAP 1μF/50V M or	CA1J1R0SP085
	ELECTROLYTIC CAP 1μF/50V M	CE1JMASTM1R0
C818	ELECTROLYTIC CAP. 470μF/16V M or	CE1CMASDL471
	ELECTROLYTIC CAP. 470μF/16V M or	CA1C471SP085
	ELECTROLYTIC CAP. 470μF/16V M	CE1CMASTM471
C819	CHIP CERAMIC CAP.(1608) B K 1000pF/50V	CHD1JK30B102
C820	CHIP CERAMIC CAP.(1608) B K 1000pF/50V	CHD1JK30B102
C831	CHIP CERAMIC CAP. F Z 0.01μF/50V	CHD1JZ30F103
C832	CHIP CERAMIC CAP.(1608) F Z 0.1μF/50V	CHD1JZ30F104
C833	CHIP CERAMIC CAP.(1608) CH J 22pF/50V	CHD1JJ3CH220
C834	CHIP CERAMIC CAP.(1608) CH J 68pF/50V	CHD1JJ3CH680
C835	CHIP CERAMIC CAP.(1608) CH J 68pF/50V	CHD1JJ3CH680
C836	CHIP CERAMIC CAP. CH D 3pF/50V or	CHD1JD3CH3R0
	CHIP CERAMIC CAP. CH C 3pF/50V or	CHD1JC3CH3R0
	CHIP CERAMIC CAP. CJ C 3pF/50V	CHD1JC3CJ3R0
C837	CHIP CERAMIC CAP. CH D 3pF/50V or	CHD1JD3CH3R0
	CHIP CERAMIC CAP. CH C 3pF/50V or	CHD1JC3CH3R0
	CHIP CERAMIC CAP. CJ C 3pF/50V	CHD1JC3CJ3R0
C838	CHIP CERAMIC CAP.(1608) CH J 100pF/50V	CHD1JJ3CH101
C839	CHIP CERAMIC CAP.(1608) CH J 100pF/50V	CHD1JJ3CH101
C840	ELECTROLYTIC CAP. 10μF/16V M or	CE1CMASDL100
	ELECTROLYTIC CAP. 10μF/16V M or	CA1C100SP085
	ELECTROLYTIC CAP. 10μF/16V M	CE1CMASTM100
C841	CHIP CERAMIC CAP. F Z 0.01μF/50V	CHD1JZ30F103
C843	ELECTROLYTIC CAP. 100μF/6.3V M or	CE0KMASDL101
	ELECTROLYTIC CAP. 100μF/6.3V M or	CA0K101SP085
	ELECTROLYTIC CAP. 100μF/6.3V M	CE0KMASTM101
C844	CHIP CERAMIC CAP.(1608) B K 0.01μF/50V	CHD1JK30B103
C845	CHIP CERAMIC CAP.(1608) B K 0.01μF/50V	CHD1JK30B103
C846	CHIP CERAMIC CAP.(1608) B K 0.01μF/50V	CHD1JK30B103
C847	ELECTROLYTIC CAP. 10μF/16V M or	CE1CMASDL100
	ELECTROLYTIC CAP. 10μF/16V M or	CA1C100SP085
	ELECTROLYTIC CAP. 10μF/16V M	CE1CMASTM100

Ref. No.	Description	Part No.
C848	CHIP CERAMIC CAP.(1608) F Z 0.1μF/50V	CHD1JZ30F104
C850	ELECTROLYTIC CAP. 10μF/16V M or	CE1CMASDL100
	ELECTROLYTIC CAP. 10μF/16V M or	CA1C100SP085
	ELECTROLYTIC CAP. 10μF/16V M	CE1CMASTM100
C851	ELECTROLYTIC CAP. 3.3μF/50V M or	CE1JMASDL3R3
	ELECTROLYTIC CAP. 3.3μF/50V M or	CA1J3R3SP085
	ALUMINUM ELECTROLYTIC CAP 3.3μF/50V M	CE1JMASTM3R3
C852	CHIP CERAMIC CAP.(1608) F Z 0.1μF/50V	CHD1JZ30F104
C853	CHIP CERAMIC CAP.(1608) F Z 0.1μF/50V	CHD1JZ30F104
C854	ELECTROLYTIC CAP. 10μF/16V M or	CE1CMASDL100
	ELECTROLYTIC CAP. 10μF/16V M or	CA1C100SP085
	ELECTROLYTIC CAP. 10μF/16V M	CE1CMASTM100
C855	CHIP CERAMIC CAP. F Z 0.47μF/16V	CHD1CZ30F474
C860	ELECTROLYTIC CAP. 2.2μF/50V M H7 or	CE1JMAVSL2R2
	ALUMINUM ELECTROLYTIC CAP 2.2μF/50V H7	CE1JMAVSM2R2
C861	CHIP CERAMIC CAP.(1608) B K 1000pF/50V	CHD1JK30B102
C871	ELECTROLYTIC CAP. 10μF/50V M or	CE1JMASDL100
	ELECTROLYTIC CAP. 10μF/50V M or	CA1J100SP085
	ALUMINUM ELECTROLYTIC CAP 10μF/50V M	CE1JMASTM100
C872	CHIP CERAMIC CAP.(1608) B K 0.1μF/50V	CHD1JK30B104
C873	CHIP CERAMIC CAP. F Z 1μF/10V	CHD1AZ30F105
C874	CHIP CERAMIC CAP. F Z 1μF/10V	CHD1AZ30F105
C875	CHIP CERAMIC CAP.(1608) F Z 0.1μF/50V	CHD1JZ30F104
C876	CHIP CERAMIC CAP.(1608) B K 1000pF/50V	CHD1JK30B102
C877	CHIP CERAMIC CAP.(1608) B K 1000pF/50V	CHD1JK30B102
CONNECTORS		
CN53	CONNECTOR PRINT OSU B5B-PH-K-S (LF)(SN)	J3PHC05JG029
CN101A	TWG CONNECTOR 09P TWG-P09P-A1	J3TWA09TG001
CN102A	TWG CONNECTOR 23P TWG-P23P-A1	J3TWA23TG001
CN103A	TWG CONNECTOR 23P TWG-P23P-A1	J3TWA23TG001
CN401	BACK LIGHT CONNECTOR 1717369-1	JB17D02AP001
CN403	BACK LIGHT CONNECTOR 1717369-1	JB17D02AP001
CN801	CONNECTOR BASE 008283021100000S+	J383C02UG003
CN802	CONNECTOR BASE 008283021100000S+	J383C02UG003
DIODES		
D11	ZENER DIODE MTZJT-776.8B or	QDTB0MTZJ6R8
	ZENER DIODE DZ-6.8BSBT265	NDTB0DZ6R8BS
D12	ZENER DIODE MTZJT-776.8B or	QDTB0MTZJ6R8
	ZENER DIODE DZ-6.8BSBT265	NDTB0DZ6R8BS
D401	SWITCHING DIODE 1SS400 or	QD1Z001SS400
	SWITCHING DIODE KDS160E-RTK/P	ND1ZKDS160EP
D402	SWITCHING DIODE 1SS400 or	QD1Z001SS400
	SWITCHING DIODE KDS160E-RTK/P	ND1ZKDS160EP
D403	ZENER DIODE MTZJT-7718B or	QDTB00MTZJ18
	ZENER DIODE DZ-18BSBT265	NDTB00DZ18BS
D404	SWITCHING DIODE 1SS400 or	QD1Z001SS400
	SWITCHING DIODE KDS160E-RTK/P	ND1ZKDS160EP
D405	SWITCHING DIODE 1SS400 or	QD1Z001SS400
	SWITCHING DIODE KDS160E-RTK/P	ND1ZKDS160EP
D406	SWITCHING DIODE 1SS400 or	QD1Z001SS400
	SWITCHING DIODE KDS160E-RTK/P	ND1ZKDS160EP
D407	SWITCHING DIODE 1SS400 or	QD1Z001SS400
	SWITCHING DIODE KDS160E-RTK/P	ND1ZKDS160EP
D408	ZENER DIODE MTZJT-776.2B or	QDTB0MTZJ6R2
	ZENER DIODE DZ-6.2BSBT265	NDTB0DZ6R2BS
D409	ZENER DIODE MTZJT-7710B or	QDTB00MTZJ10
	ZENER DIODE DZ-10BSBT265	NDTB00DZ10BS
D421	SWITCHING DIODE 1SS400 or	QD1Z001SS400
	SWITCHING DIODE KDS160E-RTK/P	ND1ZKDS160EP
D422	SWITCHING DIODE 1SS133(T-77)	QDTZ001SS133
D423	SWITCHING DIODE 1SS400 or	QD1Z001SS400
	SWITCHING DIODE KDS160E-RTK/P	ND1ZKDS160EP
D424	SWITCHING DIODE 1SS400 or	QD1Z001SS400
	SWITCHING DIODE KDS160E-RTK/P	ND1ZKDS160EP
D425	SWITCHING DIODE 1SS133(T-77)	QDTZ001SS133
D426	SWITCHING DIODE 1SS400 or	QD1Z001SS400

Ref. No.	Description	Part No.
	SWITCHING DIODE KDS160E-RTK/P	ND1ZKDS160EP
D427	SWITCHING DIODE 1SS400 or	QD1Z001SS400
	SWITCHING DIODE KDS160E-RTK/P	ND1ZKDS160EP
D428	SWITCHING DIODE 1SS400 or	QD1Z001SS400
	SWITCHING DIODE KDS160E-RTK/P	ND1ZKDS160EP
D429	SWITCHING DIODE 1SS400 or	QD1Z001SS400
	SWITCHING DIODE KDS160E-RTK/P	ND1ZKDS160EP
D430	SWITCHING DIODE 1SS400 or	QD1Z001SS400
	SWITCHING DIODE KDS160E-RTK/P	ND1ZKDS160EP
D431	SWITCHING DIODE 1SS133(T-77)	QDTZ001SS133
D432	SWITCHING DIODE 1SS133(T-77)	QDTZ001SS133
D433	SWITCHING DIODE 1SS133(T-77)	QDTZ001SS133
D434	SWITCHING DIODE 1SS133(T-77)	QDTZ001SS133
D461	SWITCHING DIODE 1SS133(T-77)	QDTZ001SS133
D462	SWITCHING DIODE 1SS400 or	QD1Z001SS400
	SWITCHING DIODE KDS160E-RTK/P	ND1ZKDS160EP
D463	SWITCHING DIODE 1SS400 or	QD1Z001SS400
	SWITCHING DIODE KDS160E-RTK/P	ND1ZKDS160EP
D464	SWITCHING DIODE 1SS400 or	QD1Z001SS400
	SWITCHING DIODE KDS160E-RTK/P	ND1ZKDS160EP
D465	SWITCHING DIODE 1SS400 or	QD1Z001SS400
	SWITCHING DIODE KDS160E-RTK/P	ND1ZKDS160EP
D466	SWITCHING DIODE 1SS400 or	QD1Z001SS400
	SWITCHING DIODE KDS160E-RTK/P	ND1ZKDS160EP
D467	SWITCHING DIODE 1SS400 or	QD1Z001SS400
	SWITCHING DIODE KDS160E-RTK/P	ND1ZKDS160EP
D468	SWITCHING DIODE 1SS400 or	QD1Z001SS400
	SWITCHING DIODE KDS160E-RTK/P	ND1ZKDS160EP
D469	SWITCHING DIODE 1SS400 or	QD1Z001SS400
	SWITCHING DIODE KDS160E-RTK/P	ND1ZKDS160EP
D470	SWITCHING DIODE 1SS400 or	QD1Z001SS400
	SWITCHING DIODE KDS160E-RTK/P	ND1ZKDS160EP
D471	SWITCHING DIODE 1SS133(T-77)	QDTZ001SS133
D472	SWITCHING DIODE 1SS133(T-77)	QDTZ001SS133
D474	SWITCHING DIODE 1SS133(T-77)	QDTZ001SS133
D476	SWITCHING DIODE 1SS133(T-77)	QDTZ001SS133
D501	SWITCHING DIODE 1SS400 or	QD1Z001SS400
	SWITCHING DIODE KDS160E-RTK/P	ND1ZKDS160EP
D502	ZENER DIODE MTZJT-7724B or	QDTB00MTZJ24
	ZENER DIODE DZ-24BSBT265	NDTB00DZ24BS
D503	SWITCHING DIODE 1SS133(T-77)	QDTZ001SS133
D504	SWITCHING DIODE 1SS400 or	QD1Z001SS400
	SWITCHING DIODE KDS160E-RTK/P	ND1ZKDS160EP
D505	IC SHUNT REGULATOR KIA431-AT/P	NSZBA0TJY036
D506	ZENER DIODE MTZJT-776.2B or	QDTB0MTZJ6R2
	ZENER DIODE DZ-6.2BSBT265	NDTB0DZ6R2BS
D507	SWITCHING DIODE 1SS133(T-77)	QDTZ001SS133
D516	ZENER DIODE MTZJT-778.2B or	QDTB0MTZJ8R2
	ZENER DIODE DZ-8.2BSBT265	NDTB0DZ8R2BS
D524⚠	ZENER DIODE MTZJT-778.2B or	QDTB0MTZJ8R2
⚠	ZENER DIODE DZ-8.2BSBT265	NDTB0DZ8R2BS
D605⚠	DIODE 1N5399-B/P or	NDLZ001N5399
⚠	RECTIFIER DIODE ERB12-06 or	QDQZ0ERB1206
⚠	DIODE 1N5399BE	NDL1001N5399
D606⚠	DIODE 1N5399-B/P or	NDLZ001N5399
⚠	RECTIFIER DIODE ERB12-06 or	QDQZ0ERB1206
⚠	DIODE 1N5399BE	NDL1001N5399
D607⚠	DIODE 1N5399-B/P or	NDLZ001N5399
⚠	RECTIFIER DIODE ERB12-06 or	QDQZ0ERB1206
⚠	DIODE 1N5399BE	NDL1001N5399
D608⚠	DIODE 1N5399-B/P or	NDLZ001N5399
⚠	RECTIFIER DIODE ERB12-06 or	QDQZ0ERB1206
⚠	DIODE 1N5399BE	NDL1001N5399
D609	ZENER DIODE MTZJT-775.6B or	QDTB0MTZJ5R6
	ZENER DIODE DZ-5.6BSBT265	NDTB0DZ5R6BS
D611⚠	ZENER DIODE MTZJT-7722B or	QDTB00MTZJ22
⚠	ZENER DIODE DZ-22BSBT265	NDTB00DZ22BS

Ref. No.	Description	Part No.
D612	SWITCHING DIODE 1SS133(T-77)	QDTZ001SS133
D613	SWITCHING DIODE 1SS133(T-77)	QDTZ001SS133
D615	SWITCHING DIODE 1SS133(T-77)	QDTZ001SS133
D616⚠	ZENER DIODE MTZJT-7733B or	QDTB00MTZJ33
⚠	ZENER DIODE DZ-33BSBT265	NDTB00DZ33BS
D620	SWITCHING DIODE 1SS133(T-77)	QDTZ001SS133
D624	DIODE ZENER 1ZC18(Q)	QDLZ001ZC18Q
D631⚠	DIODE SCHOTTKY 30PHA20	QDLZ030PHA20
D632⚠	DIODE FR104-B or	NDLZ000FR104
⚠	DIODE FR104BB	NDL1000FR104
D633⚠	DIODE FR154 or	NDLZ000FR154
⚠	DIODE FR154BD	NDL1000FR154
D635⚠	DIODE FR154 or	NDLZ000FR154
⚠	DIODE FR154BD	NDL1000FR154
D636⚠	DIODE FR154 or	NDLZ000FR154
⚠	DIODE FR154BD	NDL1000FR154
D637	DIODE 1ZC43(Q)	QDLZ001ZC43Q
D638⚠	SCHOTTKY BARRIER DIODE ERB84-009	QD7Z000ERB84
D639	SWITCHING DIODE 1SS400 or	QD1Z001SS400
	SWITCHING DIODE KDS160E-RTK/P	ND1ZKDS160EP
D640	DIODE 1N5397-B	NDLZ001N5397
D641	SWITCHING DIODE 1SS400 or	QD1Z001SS400
	SWITCHING DIODE KDS160E-RTK/P	ND1ZKDS160EP
D642	SWITCHING DIODE 1SS400 or	QD1Z001SS400
	SWITCHING DIODE KDS160E-RTK/P	ND1ZKDS160EP
D643	ZENER DIODE MTZJT-7715B or	QDTB00MTZJ15
	ZENER DIODE DZ-15BSBT265	NDTB00DZ15BS
D644	SWITCHING DIODE 1SS400 or	QD1Z001SS400
	SWITCHING DIODE KDS160E-RTK/P	ND1ZKDS160EP
D645	SWITCHING DIODE 1SS400 or	QD1Z001SS400
	SWITCHING DIODE KDS160E-RTK/P	ND1ZKDS160EP
D646	SWITCHING DIODE 1SS133(T-77)	QDTZ001SS133
D647⚠	IC SHUNT REGULATOR KIA431-AT/P	NSZBA0TJY036
D648	SWITCHING DIODE 1SS400 or	QD1Z001SS400
	SWITCHING DIODE KDS160E-RTK/P	ND1ZKDS160EP
D649⚠	ZENER DIODE MTZJT-7739B or	QDTB00MTZJ39
⚠	ZENER DIODE DZ-39BSBT265	NDTB00DZ39BS
D650	SWITCHING DIODE 1SS400 or	QD1Z001SS400
	SWITCHING DIODE KDS160E-RTK/P	ND1ZKDS160EP
D651	SWITCHING DIODE 1SS400 or	QD1Z001SS400
	SWITCHING DIODE KDS160E-RTK/P	ND1ZKDS160EP
D653	SWITCHING DIODE 1SS400 or	QD1Z001SS400
	SWITCHING DIODE KDS160E-RTK/P	ND1ZKDS160EP
D654	ZENER DIODE MTZJT-7736B or	QDTB00MTZJ36
	ZENER DIODE DZ-36BSBT265	NDTB00DZ36BS
D655	SWITCHING DIODE 1SS400 or	QD1Z001SS400
	SWITCHING DIODE KDS160E-RTK/P	ND1ZKDS160EP
D656	SCHOTTKY BARRIER DIODE ERA81-004Q	QDLZRA81004Q
D657	DIODE 1N5397-B	NDLZ001N5397
D660	SWITCHING DIODE 1SS133(T-77)	QDTZ001SS133
D663	SWITCHING DIODE 1SS133(T-77)	QDTZ001SS133
D664	SWITCHING DIODE 1SS133(T-77)	QDTZ001SS133
D665	DIODE 1N5397-B	NDLZ001N5397
D666	ZENER DIODE MTZJT-775.1B or	QDTB0MTZJ5R1
	ZENER DIODE DZ-5.1BSBT265	NDTB0DZ5R1BS
D667	SWITCHING DIODE 1SS133(T-77)	QDTZ001SS133
D668	SWITCHING DIODE 1SS400 or	QD1Z001SS400
	SWITCHING DIODE KDS160E-RTK/P	ND1ZKDS160EP
D712	PCB JUMPER D0.6-P5.0	JW5.0T
D713	SWITCHING DIODE 1SS133(T-77)	QDTZ001SS133
D714	SWITCHING DIODE 1SS133(T-77)	QDTZ001SS133
D730	SWITCHING DIODE 1SS400 or	QD1Z001SS400
	SWITCHING DIODE KDS160E-RTK/P	ND1ZKDS160EP
D751	ZENER DIODE MTZJT-776.2B or	QDTB0MTZJ6R2
	ZENER DIODE DZ-6.2BSBT265	NDTB0DZ6R2BS
D752	ZENER DIODE MTZJT-776.2B or	QDTB0MTZJ6R2
	ZENER DIODE DZ-6.2BSBT265	NDTB0DZ6R2BS

Ref. No.	Description	Part No.
D753	ZENER DIODE MTZJT-776.2B or	QDTB0MTZJ6R2
	ZENER DIODE DZ-6.2BSBT265	NDTB0DZ6R2BS
D754	ZENER DIODE MTZJT-776.2B or	QDTB0MTZJ6R2
	ZENER DIODE DZ-6.2BSBT265	NDTB0DZ6R2BS
D755	ZENER DIODE MTZJT-775.1B or	QDTB0MTZJ5R1
	ZENER DIODE DZ-5.1BSBT265	NDTB0DZ5R1BS
D756	ZENER DIODE MTZJT-775.1B or	QDTB0MTZJ5R1
	ZENER DIODE DZ-5.1BSBT265	NDTB0DZ5R1BS
D802⚠	SWITCHING DIODE 1SS400 or	QD1Z001SS400
⚠	SWITCHING DIODE KDS160E-RTK/P	ND1ZKDS160EP
D803⚠	ZENER DIODE MTZJT-776.2B or	QDTB0MTZJ6R2
⚠	ZENER DIODE DZ-6.2BSBT265	NDTB0DZ6R2BS
D804	PCB JUMPER D0.6-P5.0	JW5.0T
D808	CHIP RES.(1608) 1/10W 0 Ω or	RRXAZR5Z0000
	RES CHIP 1608 1/10W J 0 Ω	RRXA000YF002
ICS		
IC601⚠	PHOTO COUPLER PS2561L1-1-A-V(L)	QPEL561L11AV
IC602	VOLTAGE REGULATOR LD1117SC-R or	NSZBA0TSS229
	VOLTAGE REGULATOR LM1117S-ADJ	NSZBA0T2T001
IC605	IC VOLTAGE REGULATOR 5V KIA7805API/P or	NSZBA0SJY041
	VOLTAGE REGULATOR KA7805A	NSZBA0SF3052
IC606⚠	IC VOLTAGE REGULATOR 5V KIA7805API/P or	NSZBA0SJY041
⚠	VOLTAGE REGULATOR KA7805A	NSZBA0SF3052
IC781	IC SWITCH TC4053BF(EL N F)	QSZBA0TTS163
IC801	IC AN17812A	QSZBA0SMS017
IC831	IC AUDIO PROCESSOR MSP3417G-QG-B8-V3	NSZBA0SP3005
IC871	IC SWITCHING TC4052BF(ELNF) or	QSZBA0TTS162
	IC SWITCHING CD4052BCSJX_NL or	NSZBA0TF3137
	IC SWITCHING CD4052BNSR	NSZBA0TTY091
COILS		
L11	PCB JUMPER D0.6-P5.0	JW5.0T
L12	INDUCTOR 22μH-K-5FT	LLARKBSTU220
L14	INDUCTOR 22μH-J-26T	LLAXJATTU220
L401	COIL CHOKE ELC10D101EL	LLC101KMS003
L403	COIL CHOKE ELC10D101EL	LLC101KMS003
L601⚠	LINE FILTER ELF17N008A	LLBG00ZMS048
L631	INDUCTOR 47μH-K-5FT	LLARKBSTU470
L632	INDUCTOR 22μH-J-26T	LLAXJATTU220
L741	INDUCTOR 12μH-J-26T	LLAXJATTU120
L760	INDUCTOR 100μH-K-5FT	LLARKBSTU101
L761	PCB JUMPER D0.6-P5.0	JW5.0T
L781	INDUCTOR 22μH-J-26T	LLAXJATTU220
L831	INDUCTOR 18μH-J-26T	LLAXJATTU180
L832	INDUCTOR 10μH-J-26T	LLAXJATTU100
L833	INDUCTOR 47μH-K-5FT	LLARKBSTU470
L834	PCB JUMPER D0.6-P5.0	JW5.0T
L835	INDUCTOR 10μH-J-26T	LLAXJATTU100
L836	PCB JUMPER D0.6-P5.0	JW5.0T
L837	PCB JUMPER D0.6-P5.0	JW5.0T
L838	INDUCTOR 2.2μH-K-5FT	LLARKBSTU2R2
L839	INDUCTOR 2.2μH-K-5FT	LLARKBSTU2R2
L840	INDUCTOR 2.2μH-K-5FT	LLARKBSTU2R2
TRANSISTORS		
Q11	TRANSISTOR 2SA1576A T106R	QQ1R2SA1576A
Q401	NPN TRANSISTOR POWER 2SC4881F HFE MAX320	QQWZ2SC4881F
Q402	TRANSISTOR 2SA950-O (TE2 F T) or	QQS002SA950F
	TRANSISTOR 2SA950-Y(TE2 F T) or	QQSY02SA950F
	TRANSISTOR (PB FREE) KTA1271-Y-AT/P	NQSYKTA1271P
Q403	TRANSISTOR 2SC4081 T106 Q	QQ1Q02SC4081
Q404	TRANSISTOR 2SC2785(F) or	QQSF02SC2785
	TRANSISTOR 2SC2785(H) or	QQSH02SC2785
	TRANSISTOR 2SC2785(J) or	QQSJ02SC2785
	TRANSISTOR KTC3199-GR-AT/P or	NQS4KTC3199P
	TRANSISTOR KTC3198-GR-AT/P	NQS4KTC3198P
Q405	TRANSISTOR 2SA1175(F) or	QQSF02SA1175
	TRANSISTOR KTA1267-GR-AT/P or	NQS1KTA1267P

Ref. No.	Description	Part No.
	TRANSISTOR KTA-1266-GR-AT/P or	NQS4KTA1266P
	TRANSISTOR 2SA1318(T)-AANP or	2SA1318TZ
	TRANSISTOR 2SA1318(U)-AANP	2SA1318UZ
Q406	TRANSISTOR 2SC2120-O(TE2 F T) or	QQS02SC2120F
	TRANSISTOR 2SC2120-Y(TE2 F T)	QQSY2SC2120F
Q421⚠	FET MOS SMD HAT2215R01-EL-E	QF2ZHAT2215R
Q422	TRANSISTOR 2SC4081 T106 Q	QQ1Q02SC4081
Q424	TRANSISTOR 2SC4081 T106 Q	QQ1Q02SC4081
Q425	TRANSISTOR 2SC4081 T106 Q	QQ1Q02SC4081
Q432	TRANSISTOR 2SC4081 T106 Q	QQ1Q02SC4081
Q461⚠	FET MOS SMD HAT2215R01-EL-E	QF2ZHAT2215R
Q462	TRANSISTOR 2SC4081 T106 Q	QQ1Q02SC4081
Q463	TRANSISTOR 2SC4081 T106 Q	QQ1Q02SC4081
Q464	TRANSISTOR 2SC4081 T106 Q	QQ1Q02SC4081
Q501	TRANSISTOR 2SA1175(F) or	QQSF02SA1175
	TRANSISTOR KTA1267-GR-AT/P or	NQS1KTA1267P
	TRANSISTOR KTA-1266-GR-AT/P or	NQS4KTA1266P
	TRANSISTOR 2SA1318(T)-AANP or	2SA1318TZ
	TRANSISTOR 2SA1318(U)-AANP	2SA1318UZ
Q502	NPN TRANSISTOR KRC103M-AT/P or	NQSZKRC103MP
	RES. BUILT-IN TRANSISTOR BA1F4M-T	QQSZ00BA1F4M
Q503	TRANSISTOR 2SD1666R or	QQER02SD1666
	TRANSISTOR 2SD1666S or	QQES02SD1666
	TRANSISTOR KTD2059-Y/P or	NQEYKTD2059P
	TRANSISTOR KTD2059-O/P	NQE0KTD2059P
Q504	TRANSISTOR 2SA1175(F) or	QQSF02SA1175
	TRANSISTOR KTA1267-GR-AT/P or	NQS1KTA1267P
	TRANSISTOR KTA-1266-GR-AT/P or	NQS4KTA1266P
	TRANSISTOR 2SA1318(T)-AANP or	2SA1318TZ
	TRANSISTOR 2SA1318(U)-AANP	2SA1318UZ
Q505	NPN TRANSISTOR KRC103M-AT/P or	NQSZKRC103MP
	RES. BUILT-IN TRANSISTOR BA1F4M-T	QQSZ00BA1F4M
Q506	TRANSISTOR 2SC2785(F) or	QQSF02SC2785
	TRANSISTOR 2SC2785(H) or	QQSH02SC2785
	TRANSISTOR 2SC2785(J) or	QQSJ02SC2785
	TRANSISTOR KTC3199-GR-AT/P or	NQS4KTC3199P
	TRANSISTOR KTC3198-GR-AT/P	NQS4KTC3198P
Q507	TRANSISTOR 2SC4081 T106 Q	QQ1Q02SC4081
Q603⚠	TRANSISTOR 2SC2120-O(TE2 F T) or	QQS02SC2120F
⚠	TRANSISTOR 2SC2120-Y(TE2 F T)	QQSY2SC2120F
Q608⚠	MOS FET 2SK3798(Q)	QFWZ2SK3798Q
Q632	TRANSISTOR 2SC2785(F) or	QQSF02SC2785
	TRANSISTOR 2SC2785(H) or	QQSH02SC2785
	TRANSISTOR 2SC2785(J) or	QQSJ02SC2785
	TRANSISTOR KTC3199-GR-AT/P or	NQS4KTC3199P
	TRANSISTOR KTC3198-GR-AT/P	NQS4KTC3198P
Q633	TRANSISTOR 2SC2120-O(TE2 F T) or	QQS02SC2120F
	TRANSISTOR 2SC2120-Y(TE2 F T)	QQSY2SC2120F
Q730	TRANSISTOR 2SC4081 T106 Q	QQ1Q02SC4081
Q731	TRANSISTOR 2SC4081 T106 Q	QQ1Q02SC4081
Q732	TRANSISTOR 2SC4081 T106 Q	QQ1Q02SC4081
Q733	TRANSISTOR 2SC4081 T106 Q	QQ1Q02SC4081
Q734	RES. BUILT-IN TRANSISTOR KRA103M-AT/P or	NQSZ0KRA103M
	RES. BUILT-IN TRANSISTOR BN1F4M-T	QQSZ00BN1F4M
Q741	TRANSISTOR 2SC4081 T106 Q	QQ1Q02SC4081
Q742	TRANSISTOR 2SC4081 T106 Q	QQ1Q02SC4081
Q743	TRANSISTOR 2SA1576A T106R	QQ1R2SA1576A
Q744	TRANSISTOR 2SC4081 T106 Q	QQ1Q02SC4081
Q781	TRANSISTOR 2SC4081 T106 Q	QQ1Q02SC4081
Q791	TRANSISTOR 2SC4081 T106 Q	QQ1Q02SC4081
Q792	TRANSISTOR 2SA1576A T106R	QQ1R2SA1576A
Q871	TRANSISTOR 2SC4081 T106 Q	QQ1Q02SC4081
Q872	TRANSISTOR 2SC4081 T106 Q	QQ1Q02SC4081
RESISTORS		
R11	CHIP RES. 1/10W J 100 Ω or	RRXAJR5Z0101
	RES CHIP 1608 1/10W J 100 Ω	RRXA101YF002
R12	CHIP RES. 1/10W J 100 Ω or	RRXAJR5Z0101

Ref. No.	Description	Part No.
	RES CHIP 1608 1/10W J 100 Ω	RRXA101YF002
R13	CARBON RES. 1/4W J 4.7k Ω	RCX4JATZ0472
R14	CARBON RES. 1/4W J 4.7k Ω	RCX4JATZ0472
R15	CHIP RES. 1/10W J 470 Ω or	RRXAJR5Z0471
	RES CHIP 1608 1/10W J 470 Ω	RRXA471YF002
R17	CHIP RES. 1/10W J 100 Ω or	RRXAJR5Z0101
	RES CHIP 1608 1/10W J 100 Ω	RRXA101YF002
R18	CHIP RES. 1/10W J 10k Ω or	RRXAJR5Z0103
	RES CHIP 1608 1/10W J 10k Ω	RRXA103YF002
R401	CHIP RES. 1/10W J 1.5k Ω or	RRXAJR5Z0152
	RES CHIP 1608 1/10W J 1.5k Ω	RRXA152YF002
R402	CARBON RES. 1/4W J 27k Ω	RCX4JATZ0273
R403	CARBON RES. 1/4W J 33 Ω	RCX4JATZ0330
R404	CARBON RES. 1/4W J 5.6k Ω	RCX4JATZ0562
R406	CHIP RES. 1/10W J 3.3k Ω or	RRXAJR5Z0332
	RES CHIP 1608 1/10W J 3.3k Ω	RRXA332YF002
R407	CHIP RES. 1/10W J 10k Ω or	RRXAJR5Z0103
	RES CHIP 1608 1/10W J 10k Ω	RRXA103YF002
R408	CARBON RES. 1/4W J 820 Ω	RCX4JATZ0821
R409	CARBON RES. 1/4W J 10k Ω	RCX4JATZ0103
R410	CARBON RES. 1/4W J 1.2k Ω	RCX4JATZ0122
R411	CHIP RES. 1/10W J 47 Ω or	RRXAJR5Z0470
	RES CHIP 1608 1/10W J 47 Ω	RRXA470YF002
R412	CHIP RES. 1/10W J 10k Ω or	RRXAJR5Z0103
	RES CHIP 1608 1/10W J 10k Ω	RRXA103YF002
R413	CHIP RES. 1/10W J 33k Ω or	RRXAJR5Z0333
	RES CHIP 1608 1/10W J 33k Ω	RRXA333YF002
R414	CARBON RES. 1/4W J 680 Ω	RCX4JATZ0681
R415	CARBON RES. 1/4W J 33 Ω	RCX4JATZ0330
R416	CARBON RES. 1/4W J 33 Ω	RCX4JATZ0330
R417	CARBON RES. 1/4W J 33 Ω	RCX4JATZ0330
R418	CARBON RES. 1/4W J 1.2k Ω	RCX4JATZ0122
R419	CARBON RES. 1/4W J 33 Ω	RCX4JATZ0330
R420	PCB JUMPER D0.6-P5.0	JW5.0T
R421	CHIP RES. 1/10W J 390 Ω or	RRXAJR5Z0391
	RES CHIP 1608 1/10W J 390 Ω	RRXA391YF002
R422	CHIP RES. 1/10W J 390 Ω or	RRXAJR5Z0391
	RES CHIP 1608 1/10W J 390 Ω	RRXA391YF002
R423	CHIP RES. 1/10W J 1k Ω or	RRXAJR5Z0102
	RES CHIP 1608 1/10W J 1.0k Ω	RRXA102YF002
R424	CHIP RES. 1/10W J 10k Ω or	RRXAJR5Z0103
	RES CHIP 1608 1/10W J 10k Ω	RRXA103YF002
R425	CHIP RES. 1/10W J 10k Ω or	RRXAJR5Z0103
	RES CHIP 1608 1/10W J 10k Ω	RRXA103YF002
R426	CHIP RES. 1/10W J 1k Ω or	RRXAJR5Z0102
	RES CHIP 1608 1/10W J 1.0k Ω	RRXA102YF002
R427	CHIP RES. 1/10W J 10k Ω or	RRXAJR5Z0103
	RES CHIP 1608 1/10W J 10k Ω	RRXA103YF002
R428	CHIP RES. 1/10W J 22 Ω or	RRXAJR5Z0220
	RES CHIP 1608 1/10W J 22 Ω	RRXA220YF002
R429	CHIP RES. 1/10W J 22 Ω or	RRXAJR5Z0220
	RES CHIP 1608 1/10W J 22 Ω	RRXA220YF002
R430	CHIP RES. 1/10W J 4.7k Ω or	RRXAJR5Z0472
	RES CHIP 1608 1/10W J 4.7k Ω	RRXA472YF002
R431	CHIP RES. 1/10W J 4.7k Ω or	RRXAJR5Z0472
	RES CHIP 1608 1/10W J 4.7k Ω	RRXA472YF002
R432	CHIP RES. 1/10W J 10k Ω or	RRXAJR5Z0103
	RES CHIP 1608 1/10W J 10k Ω	RRXA103YF002
R433	CHIP RES. 1/10W J 10k Ω or	RRXAJR5Z0103
	RES CHIP 1608 1/10W J 10k Ω	RRXA103YF002
R434	CHIP RES. 1/10W J 15k Ω or	RRXAJR5Z0153
	RES CHIP 1608 1/10W J 15k Ω	RRXA153YF002
R435	CHIP RES. 1/10W J 2.2k Ω or	RRXAJR5Z0222
	RES CHIP 1608 1/10W J 2.2k Ω	RRXA222YF002
R436	CHIP RES. 1/10W J 10k Ω or	RRXAJR5Z0103
	RES CHIP 1608 1/10W J 10k Ω	RRXA103YF002
R437	CHIP RES. 1/10W J 10k Ω or	RRXAJR5Z0103

Ref. No.	Description	Part No.
	RES CHIP 1608 1/10W J 10k Ω	RRXA103YF002
R461	CHIP RES. 1/10W J 390 Ω or	RRXAJR5Z0391
	RES CHIP 1608 1/10W J 390 Ω	RRXA391YF002
R462	CHIP RES. 1/10W J 390 Ω or	RRXAJR5Z0391
	RES CHIP 1608 1/10W J 390 Ω	RRXA391YF002
R463	CHIP RES. 1/10W J 1k Ω or	RRXAJR5Z0102
	RES CHIP 1608 1/10W J 1.0k Ω	RRXA102YF002
R464	CHIP RES. 1/10W J 10k Ω or	RRXAJR5Z0103
	RES CHIP 1608 1/10W J 10k Ω	RRXA103YF002
R465	CHIP RES. 1/10W J 1k Ω or	RRXAJR5Z0102
	RES CHIP 1608 1/10W J 1.0k Ω	RRXA102YF002
R466	CHIP RES. 1/10W J 10k Ω or	RRXAJR5Z0103
	RES CHIP 1608 1/10W J 10k Ω	RRXA103YF002
R467	CHIP RES. 1/10W J 22 Ω or	RRXAJR5Z0220
	RES CHIP 1608 1/10W J 22 Ω	RRXA220YF002
R468	CHIP RES. 1/10W J 22 Ω or	RRXAJR5Z0220
	RES CHIP 1608 1/10W J 22 Ω	RRXA220YF002
R469	CHIP RES. 1/10W J 4.7k Ω or	RRXAJR5Z0472
	RES CHIP 1608 1/10W J 4.7k Ω	RRXA472YF002
R470	CHIP RES. 1/10W J 4.7k Ω or	RRXAJR5Z0472
	RES CHIP 1608 1/10W J 4.7k Ω	RRXA472YF002
R471	CHIP RES. 1/10W J 10k Ω or	RRXAJR5Z0103
	RES CHIP 1608 1/10W J 10k Ω	RRXA103YF002
R472	CHIP RES. 1/10W J 10k Ω or	RRXAJR5Z0103
	RES CHIP 1608 1/10W J 10k Ω	RRXA103YF002
R473	CHIP RES. 1/10W J 10k Ω or	RRXAJR5Z0103
	RES CHIP 1608 1/10W J 10k Ω	RRXA103YF002
R476	CHIP RES. 1/10W J 10k Ω or	RRXAJR5Z0103
	RES CHIP 1608 1/10W J 10k Ω	RRXA103YF002
R477	CHIP RES. 1/10W J 10k Ω or	RRXAJR5Z0103
	RES CHIP 1608 1/10W J 10k Ω	RRXA103YF002
R502	CHIP RES. 1/10W J 3.3k Ω or	RRXAJR5Z0332
	RES CHIP 1608 1/10W J 3.3k Ω	RRXA332YF002
R503	CARBON RES. 1/4W J 27k Ω	RCX4JATZ0273
R504	CARBON RES. 1/4W J 1.5k Ω	RCX4JATZ0152
R505	CHIP RES. 1/10W J 22k Ω or	RRXAJR5Z0223
	RES CHIP 1608 1/10W J 22k Ω	RRXA223YF002
R507	PCB JUMPER D0.6-P5.0	JW5.0T
R509	CARBON RES. 1/4W J 100 Ω	RCX4JATZ0101
R510	CARBON RES. 1/4W J 4.7k Ω	RCX4JATZ0472
R511	CHIP RES. 1/10W J 1.5k Ω or	RRXAJR5Z0152
	RES CHIP 1608 1/10W J 1.5k Ω	RRXA152YF002
R512	CHIP RES. 1/10W J 3.3k Ω or	RRXAJR5Z0332
	RES CHIP 1608 1/10W J 3.3k Ω	RRXA332YF002
R513	CHIP RES. 1/10W J 27k Ω or	RRXAJR5Z0273
	RES CHIP 1608 1/10W J 27k Ω	RRXA273YF002
R514	CHIP RES. 1/10W F 10k Ω or	RRXAFR5H1002
	CHIP RES. 1/10W F 10k Ω or	RRXAFR5Z1002
	RES CHIP 1608 1/10W F 10.0k Ω	RTW1002YF002
R515	CHIP RES.(1608) 1/10W 0 Ω or	RRXAZR5Z0000
	RES CHIP 1608 1/10W J 0 Ω	RRXA000YF002
R516	CHIP RES. 1/10W F 3k Ω or	RRXAFR5H3001
	CHIP RES. 1/10W F 3.0k Ω or	RRXAFR5Z3001
	RES CHIP 1608 1/10W F 3.00k Ω	RTW3001YF002
R517	CARBON RES. 1/4W J 10k Ω	RCX4JATZ0103
R518	CHIP RES. 1/10W J 10k Ω or	RRXAJR5Z0103
	RES CHIP 1608 1/10W J 10k Ω	RRXA103YF002
R519	CARBON RES. 1/4W J 150 Ω	RCX4JATZ0151
R520	CHIP RES. 1/10W J 56k Ω or	RRXAJR5Z0563
	RES CHIP 1608 1/10W J 56k Ω	RRXA563YF002
R521	CHIP RES. 1/10W J 47k Ω or	RRXAJR5Z0473
	RES CHIP 1608 1/10W J 47k Ω	RRXA473YF002
R526	CHIP RES.(1608) 1/10W 0 Ω or	RRXAZR5Z0000
	RES CHIP 1608 1/10W J 0 Ω	RRXA000YF002
R601⚠	CARBON RES. 1/2W J 3.3M Ω or	RCX2335DP001
⚠	GLASS GLAZE RES. 1/2W J 3.3M Ω	RXX2JZLZ0335
R602⚠	CEMENT RESISTOR 5W K 1.2 Ω or	RW051R2PG001

Ref. No.	Description	Part No.
⚠	CEMENT RESISTOR 5W J 1.2 Ω H 10MM	RW051R2PAK10
R603	CARBON RES. 1/4W J 820k Ω	RCX4JATZ0824
R604	CARBON RES. 1/4W J 680k Ω	RCX4JATZ0684
R605	CARBON RES. 1/4W J 680k Ω	RCX4JATZ0684
R606	CARBON RES. 1/4W J 820k Ω	RCX4JATZ0824
R607	CARBON RES. 1/4W J 180 Ω	RCX4JATZ0181
R608	CARBON RES. 1/4W J 180 Ω	RCX4JATZ0181
R609	CARBON RES. 1/4W J 680k Ω	RCX4JATZ0684
R610	CARBON RES. 1/4W J 150 Ω	RCX4JATZ0151
R611	CARBON RES. 1/4W J 470 Ω	RCX4JATZ0471
R613⚠	METAL OXIDE FILM RES. 2W J 0.68 Ω or	RN02R68ZU001
⚠	METAL OXIDE FILM RES. 2W J 0.68 Ω	RN02R68DP004
R620	CARBON RES. 1/4W J 150 Ω	RCX4JATZ0151
R621	CARBON RES. 1/4W J 1.2k Ω	RCX4JATZ0122
R623	CARBON RES. 1/4W J 2.2k Ω	RCX4JATZ0222
R625	CARBON RES. 1/4W J 2.2 Ω	RCX4JATZ02R2
R626	CARBON RES. 1/4W J 2.2 Ω	RCX4JATZ02R2
R627	CARBON RES. 1/4W J 2.2 Ω	RCX4JATZ02R2
R631	CARBON RES. 1/4W J 5.6k Ω	RCX4JATZ0562
R632	CHIP RES. 1/10W J 33k Ω or	RRXAJR5Z0333
	RES CHIP 1608 1/10W J 33k Ω	RRXA333YF002
R633	CARBON RES. 1/4W J 12k Ω	RCX4JATZ0123
R635	CARBON RES. 1/4W J 6.8k Ω	RCX4JATZ0682
R636	CARBON RES. 1/4W J 22k Ω	RCX4JATZ0223
R638	CARBON RES. 1/4W J 2.2 Ω	RCX4JATZ02R2
R640	CHIP RES. 1/10W F 1.8k Ω or	RRXAFR5H1801
	CHIP RES. 1/10W F 1.8k Ω or	RRXAFR5Z1801
	RES CHIP 1608 1/10W F 1.80k Ω	RTW1801YF002
R641	CHIP RES. 1/10W F 1.1k Ω or	RRXAFR5H1101
	CHIP RES. 1/10W F 1.1k Ω or	RRXAFR5Z1101
	RES CHIP 1608 1/10W F 1.10k Ω	RTW1101YF002
R645	CHIP RES. 1/10W F 2.2k Ω or	RRXAFR5H2201
	CHIP RES.(1608) 1/10W F 2.2k Ω or	RRXAFR5Z2201
	RES CHIP 1608 1/10W F 2.20k Ω	RTW2201YF002
R646	CARBON RES. 1/4W J 1.2k Ω	RCX4JATZ0122
R647⚠	CHIP RES. 1/10W F 3.9k Ω or	RRXAFR5H3901
⚠	CHIP RES.(1608) 1/10W F 3.9k Ω or	RRXAFR5Z3901
⚠	RES CHIP 1608 1/10W F 3.90k Ω	RTW3901YF002
R648⚠	CHIP RES. 1/10W F 3.9k Ω or	RRXAFR5H3901
⚠	CHIP RES.(1608) 1/10W F 3.9k Ω or	RRXAFR5Z3901
⚠	RES CHIP 1608 1/10W F 3.90k Ω	RTW3901YF002
R649⚠	CHIP RES. 1/10W F 4.7k Ω or	RRXAFR5H4701
⚠	CHIP RES.(1608) 1/10W F 4.7k Ω or	RRXAFR5Z4701
⚠	RES CHIP 1608 1/10W F 4.70k Ω	RTW4701YF002
R650⚠	CHIP RES. 1/10W F 4.7k Ω or	RRXAFR5H4701
⚠	CHIP RES.(1608) 1/10W F 4.7k Ω or	RRXAFR5Z4701
⚠	RES CHIP 1608 1/10W F 4.70k Ω	RTW4701YF002
R651⚠	CHIP RES. 1/10W F 1.5k Ω or	RRXAFR5H1501
⚠	CHIP RES. 1/10W F 1.5k Ω or	RRXAFR5Z1501
⚠	RES CHIP 1608 1/10W F 1.50k Ω	RTW1501YF002
R652⚠	CHIP RES. 1/10W F 1.5k Ω or	RRXAFR5H1501
⚠	CHIP RES. 1/10W F 1.5k Ω or	RRXAFR5Z1501
⚠	RES CHIP 1608 1/10W F 1.50k Ω	RTW1501YF002
R653⚠	CHIP RES. 1/10W F 1.5k Ω or	RRXAFR5H1501
⚠	CHIP RES. 1/10W F 1.5k Ω or	RRXAFR5Z1501
⚠	RES CHIP 1608 1/10W F 1.50k Ω	RTW1501YF002
R654⚠	CHIP RES. 1/10W F 1.5k Ω or	RRXAFR5H1501
⚠	CHIP RES. 1/10W F 1.5k Ω or	RRXAFR5Z1501
⚠	RES CHIP 1608 1/10W F 1.50k Ω	RTW1501YF002
R655	CARBON RES. 1/4W J 10k Ω	RCX4JATZ0103
R656	CHIP RES. 1/10W J 100k Ω or	RRXAJR5Z0104
	RES CHIP 1608 1/10W J 100k Ω	RRXA104YF002
R657	CARBON RES. 1/4W J 390 Ω	RCX4JATZ0391
R659⚠	CHIP RES. 1/10W J 10k Ω or	RRXAJR5Z0103
⚠	RES CHIP 1608 1/10W J 10k Ω	RRXA103YF002
R661	CARBON RES. 1/4W J 1.2k Ω	RCX4JATZ0122
R663	CARBON RES. 1/4W J 2.2 Ω	RCX4JATZ02R2

Ref. No.	Description	Part No.
R664	CARBON RES. 1/4W J 2.2 Ω	RCX4JATZ02R2
R665	PCB JUMPER D0.6-P5.0	JW5.0T
R667	CARBON RES. 1/4W J 2.2k Ω	RCX4JATZ0222
R669	CARBON RES. 1/4W J 330 Ω	RCX4JATZ0331
R670	CARBON RES. 1/4W J 330 Ω	RCX4JATZ0331
R671	CARBON RES. 1/4W J 330 Ω	RCX4JATZ0331
R672	METAL OXIDE FILM RES. 2W J 5.6 Ω or	RN025R6ZU001
	METAL OXIDE FILM RES. 2W J 5.6 Ω	RN025R6DP004
R701	CHIP RES. 1/10W J 75 Ω or	RRXAJR5Z0750
	RES CHIP 1608 1/10W J 75 Ω	RRXA750YF002
R702	CHIP RES. 1/10W J 100 Ω or	RRXAJR5Z0101
	RES CHIP 1608 1/10W J 100 Ω	RRXA101YF002
R707	CHIP RES. 1/10W J 75 Ω or	RRXAJR5Z0750
	RES CHIP 1608 1/10W J 75 Ω	RRXA750YF002
R708	CHIP RES. 1/10W J 100 Ω or	RRXAJR5Z0101
	RES CHIP 1608 1/10W J 100 Ω	RRXA101YF002
R713	CARBON RES. 1/4W J 75 Ω	RCX4JATZ0750
R714	CHIP RES. 1/10W J 100 Ω or	RRXAJR5Z0101
	RES CHIP 1608 1/10W J 100 Ω	RRXA101YF002
R716	CHIP RES. 1/10W J 47k Ω or	RRXAJR5Z0473
	RES CHIP 1608 1/10W J 47k Ω	RRXA473YF002
R717	CHIP RES. 1/10W J 1k Ω or	RRXAJR5Z0102
	RES CHIP 1608 1/10W J 1.0k Ω	RRXA102YF002
R718	CHIP RES. 1/10W J 18k Ω or	RRXAJR5Z0183
	RES CHIP 1608 1/10W J 18k Ω	RRXA183YF002
R719	CHIP RES. 1/10W J 47k Ω or	RRXAJR5Z0473
	RES CHIP 1608 1/10W J 47k Ω	RRXA473YF002
R720	CHIP RES. 1/10W J 1k Ω or	RRXAJR5Z0102
	RES CHIP 1608 1/10W J 1.0k Ω	RRXA102YF002
R721	CHIP RES. 1/10W J 18k Ω or	RRXAJR5Z0183
	RES CHIP 1608 1/10W J 18k Ω	RRXA183YF002
R722	CARBON RES. 1/4W J 1.5k Ω	RCX4JATZ0152
R723	CARBON RES. 1/4W J 1.5k Ω	RCX4JATZ0152
R724	CHIP RES.(1608) 1/10W 0 Ω or	RRXAZR5Z0000
	RES CHIP 1608 1/10W J 0 Ω	RRXA000YF002
R725	CHIP RES. 1/10W J 4.7k Ω or	RRXAJR5Z0472
	RES CHIP 1608 1/10W J 4.7k Ω	RRXA472YF002
R726	CHIP RES.(1608) 1/10W 0 Ω or	RRXAZR5Z0000
	RES CHIP 1608 1/10W J 0 Ω	RRXA000YF002
R727	CHIP RES. 1/10W J 4.7k Ω or	RRXAJR5Z0472
	RES CHIP 1608 1/10W J 4.7k Ω	RRXA472YF002
R729	CHIP RES. 1/10W J 68k Ω or	RRXAJR5Z0683
	RES CHIP 1608 1/10W J 68k Ω	RRXA683YF002
R730	CHIP RES. 1/10W J 1k Ω or	RRXAJR5Z0102
	RES CHIP 1608 1/10W J 1.0k Ω	RRXA102YF002
R731	CHIP RES. 1/10W J 10k Ω or	RRXAJR5Z0103
	RES CHIP 1608 1/10W J 10k Ω	RRXA103YF002
R732	CHIP RES. 1/10W J 22k Ω or	RRXAJR5Z0223
	RES CHIP 1608 1/10W J 22k Ω	RRXA223YF002
R733	CHIP RES. 1/10W J 47k Ω or	RRXAJR5Z0473
	RES CHIP 1608 1/10W J 47k Ω	RRXA473YF002
R735	CHIP RES. 1/10W J 22k Ω or	RRXAJR5Z0223
	RES CHIP 1608 1/10W J 22k Ω	RRXA223YF002
R736	CHIP RES.(1608) 1/10W 0 Ω or	RRXAZR5Z0000
	RES CHIP 1608 1/10W J 0 Ω	RRXA000YF002
R737	CHIP RES. 1/10W J 1k Ω or	RRXAJR5Z0102
	RES CHIP 1608 1/10W J 1.0k Ω	RRXA102YF002
R738	CHIP RES. 1/10W J 1k Ω or	RRXAJR5Z0102
	RES CHIP 1608 1/10W J 1.0k Ω	RRXA102YF002
R740	CHIP RES. 1/10W J 47k Ω or	RRXAJR5Z0473
	RES CHIP 1608 1/10W J 47k Ω	RRXA473YF002
R741	CARBON RES. 1/4W J 560 Ω	RCX4JATZ0561
R743	CHIP RES. 1/10W J 390 Ω or	RRXAJR5Z0391
	RES CHIP 1608 1/10W J 390 Ω	RRXA391YF002
R744	CHIP RES. 1/10W J 33k Ω or	RRXAJR5Z0333
	RES CHIP 1608 1/10W J 33k Ω	RRXA333YF002
R745	CHIP RES. 1/10W J 39k Ω or	RRXAJR5Z0393

Ref. No.	Description	Part No.
	RES CHIP 1608 1/10W J 39k Ω	RRXA393YF002
R746	CARBON RES. 1/4W J 560 Ω	RCX4JATZ0561
R748	CHIP RES. 1/10W J 390 Ω or	RRXAJR5Z0391
	RES CHIP 1608 1/10W J 390 Ω	RRXA391YF002
R749	CHIP RES. 1/10W J 33k Ω or	RRXAJR5Z0333
	RES CHIP 1608 1/10W J 33k Ω	RRXA333YF002
R750	CHIP RES. 1/10W J 39k Ω or	RRXAJR5Z0393
	RES CHIP 1608 1/10W J 39k Ω	RRXA393YF002
R751	CHIP RES. 1/10W J 75 Ω or	RRXAJR5Z0750
	RES CHIP 1608 1/10W J 75 Ω	RRXA750YF002
R752	CHIP RES. 1/10W J 100 Ω or	RRXAJR5Z0101
	RES CHIP 1608 1/10W J 100 Ω	RRXA101YF002
R756	CARBON RES. 1/4W J 4.7k Ω	RCX4JATZ0472
R757	CHIP RES. 1/10W J 47k Ω or	RRXAJR5Z0473
	RES CHIP 1608 1/10W J 47k Ω	RRXA473YF002
R758	CHIP RES. 1/10W J 75 Ω or	RRXAJR5Z0750
	RES CHIP 1608 1/10W J 75 Ω	RRXA750YF002
R759	CHIP RES. 1/10W J 100 Ω or	RRXAJR5Z0101
	RES CHIP 1608 1/10W J 100 Ω	RRXA101YF002
R763	CHIP RES. 1/10W J 75 Ω or	RRXAJR5Z0750
	RES CHIP 1608 1/10W J 75 Ω	RRXA750YF002
R764	CARBON RES. 1/4W J 75 Ω	RCX4JATZ0750
R765	CHIP RES. 1/10W J 75 Ω or	RRXAJR5Z0750
	RES CHIP 1608 1/10W J 75 Ω	RRXA750YF002
R766	CHIP RES. 1/10W J 100 Ω or	RRXAJR5Z0101
	RES CHIP 1608 1/10W J 100 Ω	RRXA101YF002
R770	CHIP RES. 1/10W J 75 Ω or	RRXAJR5Z0750
	RES CHIP 1608 1/10W J 75 Ω	RRXA750YF002
R771	CHIP RES. 1/10W J 100 Ω or	RRXAJR5Z0101
	RES CHIP 1608 1/10W J 100 Ω	RRXA101YF002
R775	CHIP RES. 1/10W J 10k Ω or	RRXAJR5Z0103
	RES CHIP 1608 1/10W J 10k Ω	RRXA103YF002
R776	CHIP RES. 1/10W J 10k Ω or	RRXAJR5Z0103
	RES CHIP 1608 1/10W J 10k Ω	RRXA103YF002
R777	CHIP RES. 1/10W J 18k Ω or	RRXAJR5Z0183
	RES CHIP 1608 1/10W J 18k Ω	RRXA183YF002
R778	CHIP RES. 1/10W J 18k Ω or	RRXAJR5Z0183
	RES CHIP 1608 1/10W J 18k Ω	RRXA183YF002
R780	CHIP RES.(1608) 1/10W 0 Ω or	RRXAZR5Z0000
	RES CHIP 1608 1/10W J 0 Ω	RRXA000YF002
R781	CHIP RES. 1/10W J 390 Ω or	RRXAJR5Z0391
	RES CHIP 1608 1/10W J 390 Ω	RRXA391YF002
R783	CHIP RES. 1/10W J 33k Ω or	RRXAJR5Z0333
	RES CHIP 1608 1/10W J 33k Ω	RRXA333YF002
R784	CHIP RES. 1/10W J 39k Ω or	RRXAJR5Z0393
	RES CHIP 1608 1/10W J 39k Ω	RRXA393YF002
R785	CHIP RES. 1/10W J 18k Ω or	RRXAJR5Z0183
	RES CHIP 1608 1/10W J 18k Ω	RRXA183YF002
R786	CHIP RES. 1/10W J 1k Ω or	RRXAJR5Z0102
	RES CHIP 1608 1/10W J 1.0k Ω	RRXA102YF002
R791	CHIP RES. 1/10W J 4.7k Ω or	RRXAJR5Z0472
	RES CHIP 1608 1/10W J 4.7k Ω	RRXA472YF002
R792	CHIP RES.(1608) 1/10W 0 Ω or	RRXAZR5Z0000
	RES CHIP 1608 1/10W J 0 Ω	RRXA000YF002
R793	CHIP RES. 1/10W J 12k Ω or	RRXAJR5Z0123
	RES CHIP 1608 1/10W J 12k Ω	RRXA123YF002
R794	CHIP RES. 1/10W J 820 Ω or	RRXAJR5Z0821
	RES CHIP 1608 1/10W J 820 Ω	RRXA821YF002
R795	CARBON RES. 1/4W J 10k Ω	RCX4JATZ0103
R796	CARBON RES. 1/4W J 10k Ω	RCX4JATZ0103
R797	CARBON RES. 1/4W J 470 Ω	RCX4JATZ0471
R798	CARBON RES. 1/4W J 470 Ω	RCX4JATZ0471
R799	CHIP RES. 1/10W J 100 Ω or	RRXAJR5Z0101
	RES CHIP 1608 1/10W J 100 Ω	RRXA101YF002
R801	CARBON RES. 1/4W J 180 Ω	RCX4JATZ0181
R802	CARBON RES. 1/4W J 180 Ω	RCX4JATZ0181
R805⚠	METAL OXIDE FILM RES. 2W J 2.2 Ω or	RN022R2ZU001

Ref. No.	Description	Part No.
⚠	METAL OXIDE FILM RES. 2W J 2.2 Ω	RN022R2DP004
R807⚠	METAL OXIDE FILM RES. 2W J 2.2 Ω or	RN022R2ZU001
⚠	METAL OXIDE FILM RES. 2W J 2.2 Ω	RN022R2DP004
R812⚠	CHIP RES. 1/10W J 2.2k Ω or	RRXAJR5Z0222
⚠	RES CHIP 1608 1/10W J 2.2k Ω	RRXA222YF002
R813	CHIP RES. 1/10W J 2.7k Ω or	RRXAJR5Z0272
	RES CHIP 1608 1/10W J 2.7k Ω	RRXA272YF002
R814	CHIP RES. 1/10W J 47k Ω or	RRXAJR5Z0473
	RES CHIP 1608 1/10W J 47k Ω	RRXA473YF002
R815	CHIP RES. 1/10W J 1.5k Ω or	RRXAJR5Z0152
	RES CHIP 1608 1/10W J 1.5k Ω	RRXA152YF002
R816	CHIP RES. 1/10W J 2.7k Ω or	RRXAJR5Z0272
	RES CHIP 1608 1/10W J 2.7k Ω	RRXA272YF002
R817	CHIP RES. 1/10W J 47k Ω or	RRXAJR5Z0473
	RES CHIP 1608 1/10W J 47k Ω	RRXA473YF002
R831	CHIP RES. 1/10W J 1.2k Ω or	RRXAJR5Z0122
	RES CHIP 1608 1/10W J 1.2k Ω	RRXA122YF002
R832	CHIP RES. 1/10W J 100 Ω or	RRXAJR5Z0101
	RES CHIP 1608 1/10W J 100 Ω	RRXA101YF002
R833	CHIP RES. 1/10W J 100 Ω or	RRXAJR5Z0101
	RES CHIP 1608 1/10W J 100 Ω	RRXA101YF002
R834	CHIP RES. 1/10W J 1k Ω or	RRXAJR5Z0102
	RES CHIP 1608 1/10W J 1.0k Ω	RRXA102YF002
R835	CHIP RES. 1/10W J 6.8k Ω or	RRXAJR5Z0682
	RES CHIP 1608 1/10W J 6.8k Ω	RRXA682YF002
R838	CHIP RES. 1/10W J 100 Ω or	RRXAJR5Z0101
	RES CHIP 1608 1/10W J 100 Ω	RRXA101YF002
R851	CHIP RES. 1/10W J 10k Ω or	RRXAJR5Z0103
	RES CHIP 1608 1/10W J 10k Ω	RRXA103YF002
R853	CHIP RES.(1608) 1/10W 0 Ω or	RRXAZR5Z0000
	RES CHIP 1608 1/10W J 0 Ω	RRXA000YF002
R862	CHIP RES. 1/10W J 10k Ω or	RRXAJR5Z0103
	RES CHIP 1608 1/10W J 10k Ω	RRXA103YF002
R863	CHIP RES. 1/10W J 10k Ω or	RRXAJR5Z0103
	RES CHIP 1608 1/10W J 10k Ω	RRXA103YF002
R871	CHIP RES. 1/10W J 1k Ω or	RRXAJR5Z0102
	RES CHIP 1608 1/10W J 1.0k Ω	RRXA102YF002
R872	CHIP RES. 1/10W J 1k Ω or	RRXAJR5Z0102
	RES CHIP 1608 1/10W J 1.0k Ω	RRXA102YF002
R873	CARBON RES. 1/4W J 15k Ω	RCX4JATZ0153
R874	CARBON RES. 1/4W J 15k Ω	RCX4JATZ0153
R875	CARBON RES. 1/4W J 22k Ω	RCX4JATZ0223
R876	CARBON RES. 1/4W J 22k Ω	RCX4JATZ0223
R877	CHIP RES. 1/10W J 22k Ω or	RRXAJR5Z0223
	RES CHIP 1608 1/10W J 22k Ω	RRXA223YF002
R878	CARBON RES. 1/4W J 22k Ω	RCX4JATZ0223
R879	CHIP RES. 1/10W J 22k Ω or	RRXAJR5Z0223
	RES CHIP 1608 1/10W J 22k Ω	RRXA223YF002
R880	CARBON RES. 1/4W J 22k Ω	RCX4JATZ0223
R881	CHIP RES. 1/10W J 22k Ω or	RRXAJR5Z0223
	RES CHIP 1608 1/10W J 22k Ω	RRXA223YF002
R882	CHIP RES. 1/10W J 22k Ω or	RRXAJR5Z0223
	RES CHIP 1608 1/10W J 22k Ω	RRXA223YF002
R883	CHIP RES. 1/10W J 22k Ω or	RRXAJR5Z0223
	RES CHIP 1608 1/10W J 22k Ω	RRXA223YF002
R884	CHIP RES. 1/10W J 22k Ω or	RRXAJR5Z0223
	RES CHIP 1608 1/10W J 22k Ω	RRXA223YF002
R885	CHIP RES. 1/10W J 22k Ω or	RRXAJR5Z0223
	RES CHIP 1608 1/10W J 22k Ω	RRXA223YF002
R886	CHIP RES. 1/10W J 22k Ω or	RRXAJR5Z0223
	RES CHIP 1608 1/10W J 22k Ω	RRXA223YF002
R887	CARBON RES. 1/4W J 22k Ω	RCX4JATZ0223
R888	CARBON RES. 1/4W J 22k Ω	RCX4JATZ0223
R901	CHIP RES. 1/10W J 10k Ω or	RRXAJR5Z0103
	RES CHIP 1608 1/10W J 10k Ω	RRXA103YF002
R903	CHIP RES. 1/10W J 10k Ω or	RRXAJR5Z0103
	RES CHIP 1608 1/10W J 10k Ω	RRXA103YF002

Ref. No.	Description	Part No.
R904	CHIP RES. 1/10W J 10k Ω or	RRXAJR5Z0103
	RES CHIP 1608 1/10W J 10k Ω	RRXA103YF002
R905	CHIP RES. 1/10W J 10k Ω or	RRXAJR5Z0103
	RES CHIP 1608 1/10W J 10k Ω	RRXA103YF002
R907	CHIP RES. 1/10W J 10k Ω or	RRXAJR5Z0103
	RES CHIP 1608 1/10W J 10k Ω	RRXA103YF002
R908	CHIP RES. 1/10W J 10k Ω or	RRXAJR5Z0103
	RES CHIP 1608 1/10W J 10k Ω	RRXA103YF002
R910	CARBON RES. 1/4W J 10k Ω	RCX4JATZ0103
R911	CHIP RES. 1/10W J 10k Ω or	RRXAJR5Z0103
	RES CHIP 1608 1/10W J 10k Ω	RRXA103YF002
MISCELLANEOUS		
B10	POW HEAT SINK PKG ASSEMBLY L3201UB	1EM420650
B22	HEAT SINK PLW ASSEMBLY L4520EA	1EM423670
BC602	BEAD INDUCTOR FBR07HA121TB-00	LLBF00ZTU021
F601⚠	FUSE 4A/250V(PB FREE) 0215004.MXP	PBGZ20BAG021
FH601	FUSE HOLDER MSF-015 LF (B110)	XH01Z00LY002
FH602	FUSE HOLDER MSF-015 LF (B110)	XH01Z00LY002
JK721	JACK SW DIN PCB L DIN-435C or	JYEL040YUQ02
	Y/C JACK 1P(SW) DMDC1-01-021	JYEL040RP001
JK722	JACK RCA PCB L RCA-112(2)-04(YL)	JXRL010YUQ10
JK723	JACK RCA PCB L RCA-112(2)-04(WH)	JXRL010YUQ11
JK724	JACK SW RCA PCB L RCA-112-03(RD)	JYRL010YUQ02
JK751	JACK RGB PCB L MRC-021V-26 ABS (B11	JXGL210LY010
JK801	MINIATURE JACK(PB FREE) CKX-035-318AZ4 or	JYSL010SNJ01
	JACK SW HPEP SML PCB L PJ-350	JYSL010YUQ03
JS381	PCB JUMPER D0.6-P7.0	JW7.0T
JS426	PCB JUMPER D0.6-P5.0	JW5.0T
JS466	PCB JUMPER D0.6-P5.0	JW5.0T
JS601	PCB JUMPER D0.6-P10.0	JW10.0T
JS602	PCB JUMPER D0.6-P10.0	JW10.0T
JS603	PCB JUMPER D0.6-P10.0	JW10.0T
JS604	PCB JUMPER D0.6-P10.0	JW10.0T
JS703	CHIP RES.(1608) 1/10W 0 Ω or	RRXAZR5Z0000
	RES CHIP 1608 1/10W J 0 Ω	RRXA000YF002
JS706	CHIP RES.(1608) 1/10W 0 Ω or	RRXAZR5Z0000
	RES CHIP 1608 1/10W J 0 Ω	RRXA000YF002
JS707	CHIP RES.(1608) 1/10W 0 Ω or	RRXAZR5Z0000
	RES CHIP 1608 1/10W J 0 Ω	RRXA000YF002
JS708	CHIP RES.(1608) 1/10W 0 Ω or	RRXAZR5Z0000
	RES CHIP 1608 1/10W J 0 Ω	RRXA000YF002
JS709	CHIP RES.(1608) 1/10W 0 Ω or	RRXAZR5Z0000
	RES CHIP 1608 1/10W J 0 Ω	RRXA000YF002
JS710	CHIP RES.(1608) 1/10W 0 Ω or	RRXAZR5Z0000
	RES CHIP 1608 1/10W J 0 Ω	RRXA000YF002
JS711	CHIP RES.(1608) 1/10W 0 Ω or	RRXAZR5Z0000
	RES CHIP 1608 1/10W J 0 Ω	RRXA000YF002
JS810	CHIP RES.(1608) 1/10W 0 Ω or	RRXAZR5Z0000
	RES CHIP 1608 1/10W J 0 Ω	RRXA000YF002
JS813	PCB JUMPER D0.6-P15.0	JW15.0T
L16	SCREW B-TIGHT D3X8 BIND HEAD+ or	GBJB3080
SA601⚠	SURGE ABSORBER 470V+-10PER or	NVQZ10D471KB
⚠	VARISTOR 10D 471K SVR	NVQZVR10D471
T401⚠	TRANS INVERTER ETJV27ZJ22AC	LTZ2PC0MS002
T402⚠	TRANS INVERTER ETJV27ZJ22AC	LTZ2PC0MS002
T601⚠	TRANS POWER 6740	LTT3PE0KT012
TM601	EYELET TYPE D-1	0VM406868
TM602	EYELET TYPE D-1	0VM406868
X831	XTAL 18.432MHz	FXD186LLN001

FUNCTION CBA

Ref. No.	Description	Part No.
	FUNCTION CBA Consists of the following:	---------
CAPACITOR		
C33	CERAMIC CAP.(AX) F Z 0.01μF/25V	CCA1EZTFZ103
CONNECTOR		
CN31B	WIRE ASSEMBLY 5PIN 5PIN 130MM AWG26	WX1L4520-001
RESISTORS		
R24	CHIP RES. 1/10W J 10k Ω or	RRXAJR5Z0103
	RES CHIP 1608 1/10W J 10k Ω	RRXA103YF002
R25	CARBON RES. 1/4W J 100 Ω	RCX4JATZ0101
R26	CARBON RES. 1/4W J 1.5k Ω	RCX4JATZ0152
R27	CHIP RES. 1/10W J 1.5k Ω or	RRXAJR5Z0152
	RES CHIP 1608 1/10W J 1.5k Ω	RRXA152YF002
R28	CHIP RES. 1/10W J 2.2k Ω or	RRXAJR5Z0222
	RES CHIP 1608 1/10W J 2.2k Ω	RRXA222YF002
R29	CHIP RES. 1/10W J 2.7k Ω or	RRXAJR5Z0272
	RES CHIP 1608 1/10W J 2.7k Ω	RRXA272YF002
R30	CARBON RES. 1/4W J 4.7k Ω	RCX4JATZ0472
R31	CHIP RES.(1608) 1/10W 0 Ω or	RRXAZR5Z0000
	RES CHIP 1608 1/10W J 0 Ω	RRXA000YF002
R32	CARBON RES. 1/4W J 10k Ω	RCX4JATZ0103
R33	CARBON RES. 1/4W J 100 Ω	RCX4JATZ0101
SWITCHES		
SW30	TACT SWITCH SKHHARA010 or	SST0101AL060
	TACT SWITCH KSMC622A	SST0101HH031
SW31	TACT SWITCH SKHHARA010 or	SST0101AL060
	TACT SWITCH KSMC622A	SST0101HH031
SW32	TACT SWITCH SKHHARA010 or	SST0101AL060
	TACT SWITCH KSMC622A	SST0101HH031
SW33	TACT SWITCH SKHHARA010 or	SST0101AL060
	TACT SWITCH KSMC622A	SST0101HH031
SW34	TACT SWITCH SKHHARA010 or	SST0101AL060
	TACT SWITCH KSMC622A	SST0101HH031
SW36	TACT SWITCH SKHHARA010 or	SST0101AL060
	TACT SWITCH KSMC622A	SST0101HH031
SW37	TACT SWITCH SKHHARA010 or	SST0101AL060
	TACT SWITCH KSMC622A	SST0101HH031

IR SENSOR CBA

Ref. No.	Description	Part No.
	IR SENSOR CBA Consists of the following:	---------
CAPACITORS		
C53	ELECTROLYTIC CAP. 47μF/10V M or	CE1AMASDL470
	ELECTROLYTIC CAP. 47μF/10V M or	CA1A470SP085
	ALUMINUM ELECTROLYTIC CAP 47μF/10V M	CE1AMASTM470
DIODE		
D51	LED L-53HT	NP4Z000L53HT
RESISTORS		
R63	CHIP RES. 1/10W J 68 Ω	RRXAJR5Z0680
R64	CHIP RES. 1/10W J 68 Ω	RRXAJR5Z0680
R63	RES CHIP 1608 1/10W J 68 Ω	RRXA680YF002
R64	RES CHIP 1608 1/10W J 68 Ω	RRXA680YF002
R65	CHIP RES. 1/10W J 150 Ω	RRXAJR5Z0151
R66	CHIP RES. 1/10W J 150 Ω	RRXAJR5Z0151
R65	RES CHIP 1608 1/10W J 150 Ω	RRXA151YF002
R66	RES CHIP 1608 1/10W J 150 Ω	RRXA151YF002
MISCELLANEOUS		
CLN53	WIRE ASSEMBLY 5PIN 5PIN 80MM AWG26	WX1L4520-002
JS52	CHIP RES.(1608) 1/10W 0 Ω or	RRXAZR5Z0000
	RES CHIP 1608 1/10W J 0 Ω	RRXA000YF002
RCV51	REMOCON RECEIVE UNIT KSM-602SR2E-2 or	USESJRSKK045
	REMOCON RESEVER MIM-0BM8DKL-C	USESJRSUNT07

PARTS produced in EU

Ref. No.	Mark	Description	Part No.
		MISCELLANEOUS	
AC601⚠	A,C,D	AC CORD CEE 1800MM BLACK	WAE0182LW004
AC601⚠	B	AC CORD BS 1800MM BLACK	WAB0182LW017
TU1	A,B,D	TUNER UNIT BS TMFE6-301A	UTUNPLGAL018
TU1	C	TUNER UNIT BS TMFE6-401A	UTUNPSGAL011

LCD-A1506/LCD-B1506/LCD-C1506/LCD-D1506
L4520EA/21BB/22FC/23RD
2006-08-04