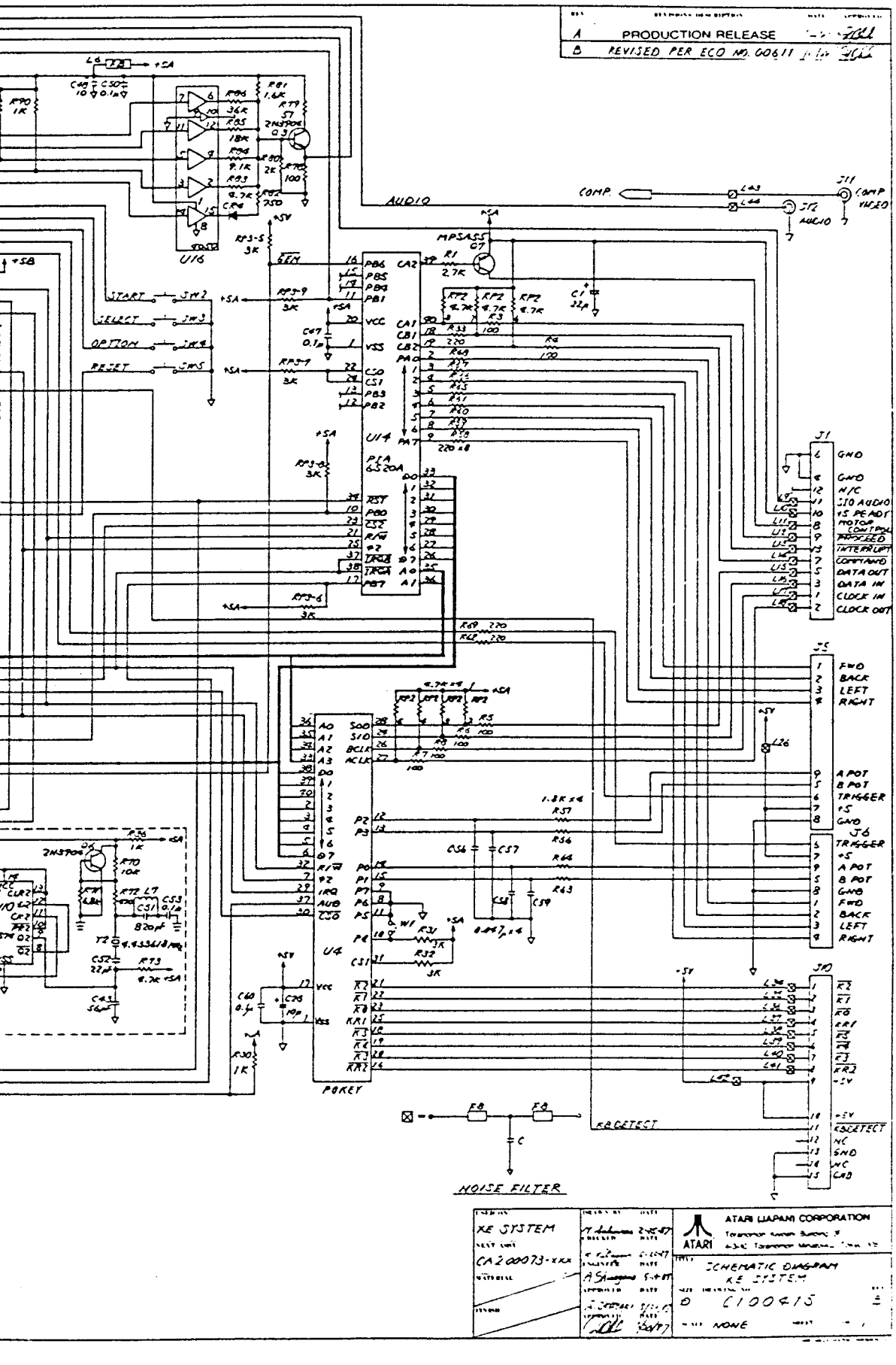
A PRODUCTION RELEASE
B REVISED PER ECO NO. 00611
U16
U14
PIA 6520A
U4
POKEY
MPSA55
COMP.
AUDIO
J11
COMP VIDEO
J12
AUDIO
START
SELECT
OPTION
RESET
J1
GND
N/C
SIO AUDIO
+5 READY
MOTOR CONTROL
PROCEED
INTERRUPT
COMMAND
DATA OUT
DATA IN
CLOCK IN
CLOCK OUT
J5
FWD
BACK
LEFT
RIGHT
A POT
B POT
TRIGGER
+5
GND
J6
J10
KBDETECT
NC
CAD
NOISE FILTER
XE SYSTEM
CA200073-XXX
ATARI CORPORATION
SCHEMATIC DIAGRAM
XE SYSTEM
D C100415
NONE

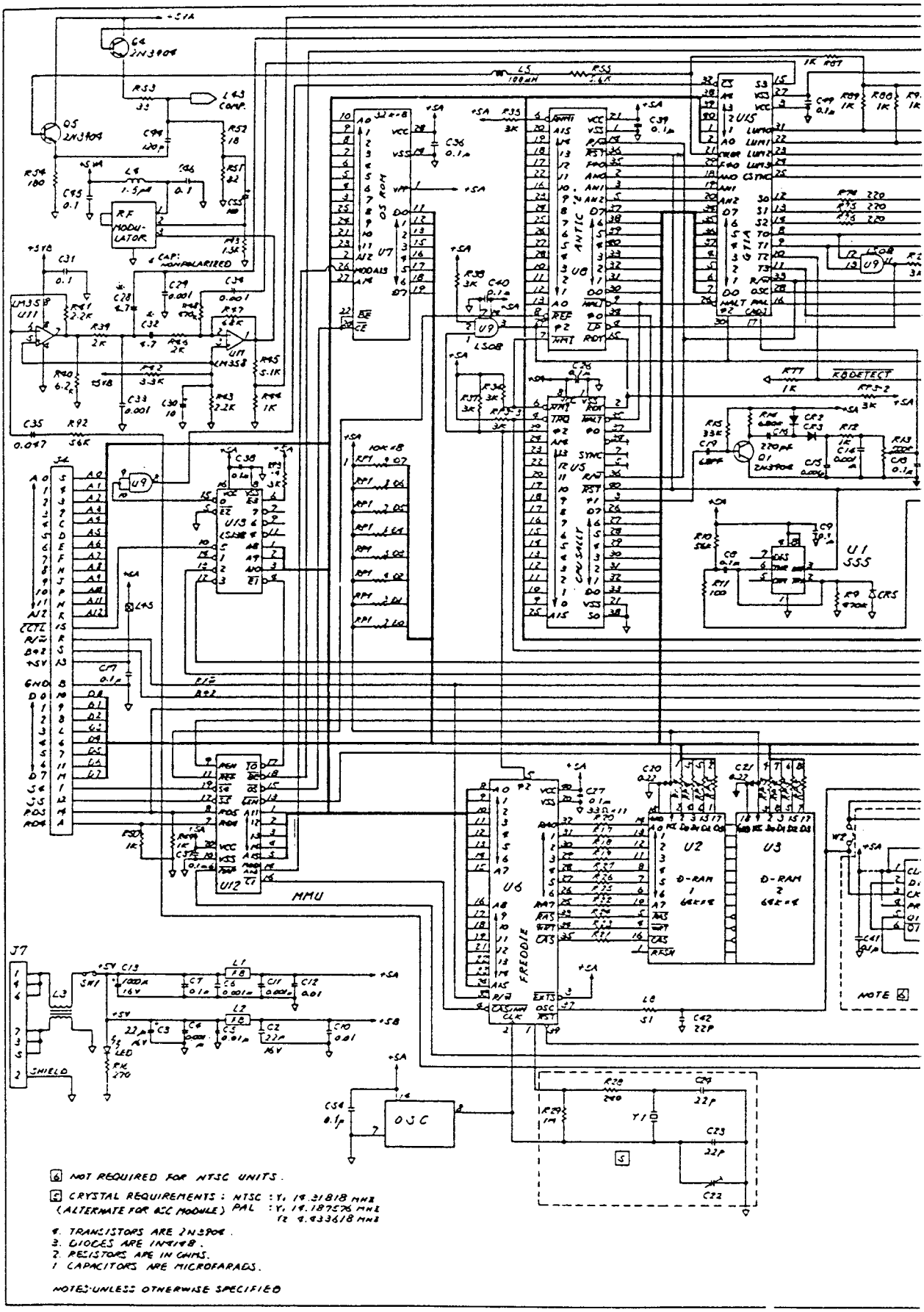

6 NOT REQUIRED FOR NTSC UNITS.

5 CRYSTAL REQUIREMENTS : NTSC : Y1 14.31818 MHz
(ALTERNATE FOR OSC MODULE) PAL : Y1 14.187576 MHz
Y2 4.433618 MHz

4. TRANSISTORS ARE 2N3904.
3. DIODES ARE 1N4148.
2. RESISTORS ARE IN OHMS.
1 CAPACITORS ARE MICROFARADS.

NOTES: UNLESS OTHERWISE SPECIFIED